7MPa Work clamping system

CTU CTT
CLU CLT
CNA CMC CMD
CSU CST CSN CSY CSK
CEK CEA CVH
VCB VCP VHD VRG VEF WPB WPC
HCD HCS HCT X63 WRA WRB

Refer to separate catalog for details.

Expansion clamp

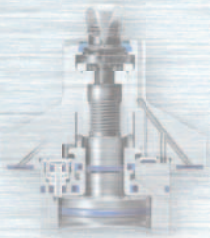

CGC
CGT
CGU
CGE
CGY

Refer to separate catalog for details.

7MPa Sensing clamp

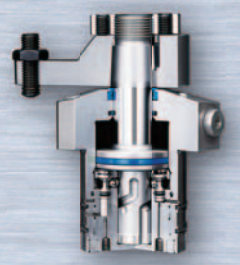

CTM
CTN
CLM
CLN
CNB

Pal system

CPC
CPH
CPY
CPK
WVP

Refer to separate catalog for details.

air Work clamping system

CTX
CTY
CLX
CLY
CSS
CSX

Refer to separate catalog for details.

35MPa Work clamping system

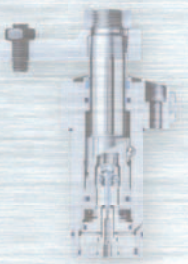

CTK CTW CTV
CLW CLV
CSW CSV
WVP
VCB VCP VHD VRG VEF WPC
HCD HCS HCT X63

Refer to separate catalog for details.

INDEX

Swing clamp

Product lineup

Page → 3

Sensing
Swing clamp Short stroke
CTM-T
3 point sensor model
7MPa
Double acting
Page → 10

Sensing
Swing clamp Long stroke
CTM-ST
3 point sensor model
7MPa
Double acting
Page → 10

Sensing
Swing clamp Short stroke
CTM-C
Clamp sensor model
7MPa
Double acting
Page → 10

Sensing
Swing clamp Long stroke
CTM-SC
Clamp sensor model
7MPa
Double acting
Page → 10

Sensing
Swing clamp Short stroke
CTM-B
Unclamp sensor model
7MPa
Double acting
Page → 11

Sensing
Swing clamp Long stroke
CTM-SB
Unclamp sensor model
7MPa
Double acting
Page → 11

Swing clamp Short stroke
CTM-N
Compact model
7MPa
Double acting
Page → 11

Swing clamp Long stroke
CTM-SN
Compact model
7MPa
Double acting
Page → 11

Swing clamp
CTN
7MPa
Single acting
Page → 84

Flow control valve
VCF
Option
Page → 94

Air bleeding valve
VCE
Option
Page → 96

Link clamp

Product lineup

Page → 99

Sensing
Link clamp
CLM-T
3 point sensor model
7MPa
Double acting
Page → 106

Sensing
Link clamp
CLM-C
Clamp sensor model
7MPa
Double acting
Page → 106

Sensing
Link clamp
CLM-B
Unclamp sensor model
7MPa
Double acting
Page → 107

Link clamp
CLM-N
Compact model
7MPa
Double acting
Page → 107

Sensing
Link clamp
CLN-B
Unclamp sensor model
7MPa
Single acting
Page → 145

Link clamp
CLN-N
Compact model
7MPa
Single acting
Page → 145

Flow control valve
VCF
Option
Page → 164

Air bleeding valve
VCE
Option
Page → 166

Clamp cylinder

Product lineup
Page → 169

Sensing
Work lift cylinder
CNB-D
Push, pull sensor model
7MPa
Double acting
Page → 174

Sensing
Work lift cylinder
CNB-U
Push sensor model
7MPa
Double acting
Page → 174

Sensing
Work lift cylinder
CNB-B
Pull sensor model
7MPa
Double acting
Page → 175

Work lift cylinder
CNB-N
Compact model
7MPa
Double acting
Page → 175

Flow control valve
VCF
Option
Page → 216

Air bleeding valve
VCE
Option
Page → 218

Option
Other

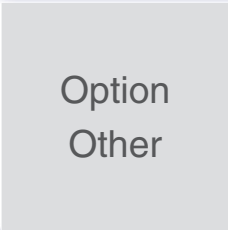

G port piping flareless fitting
8FK
Option
Page → 220

Swing clamp			model **CTM** Page →6		model **CTN** Page →82	
Specifications			7MPa Double acting		7MPa Single acting	
Features			Low profiled cylinder Built-in sensor model		Low profiled cylinder	
Clamp stroke			Short stroke	Long stroke	Standard	Long stroke
Variations	3 point sensor model		CTM-T **Page →22**	CTM-ST **Page →26**	—	
	Clamp sensor model		CTM-C **Page →36**	CTM-SC **Page →40**	—	
	Unclamp sensor model		CTM-B **Page →50**	CTM-SB **Page →54**	—	
	Compact model (without sensor)		CTM-N **Page →60**	CTM-SN **Page →64**	CTN **Page →88**	—
	Pin rod		*		—	
	Swing angle 30°, 45°, 60°		*		—	
	Bottom piping specifications		*		—	
Option	Taper sleeve		CTH-MS **Page →70**		(Included)	
	Perfect nut		CTH-MN **Page →73**		—	
	Perfect release nut		CTH-MNR **Page →75**		—	
	Quick arm change		CTH-BQ **Page →80**		—	
	Flow control valve		VCF **Page →94**			
	Air bleeding valve		VCE **Page →96**			

*：Contact Pascal for the details.

Super compact body

The significant downsizing is realized compared to the conventinal model.

Compact model
(without sensor)

Standard model
(without sensor)

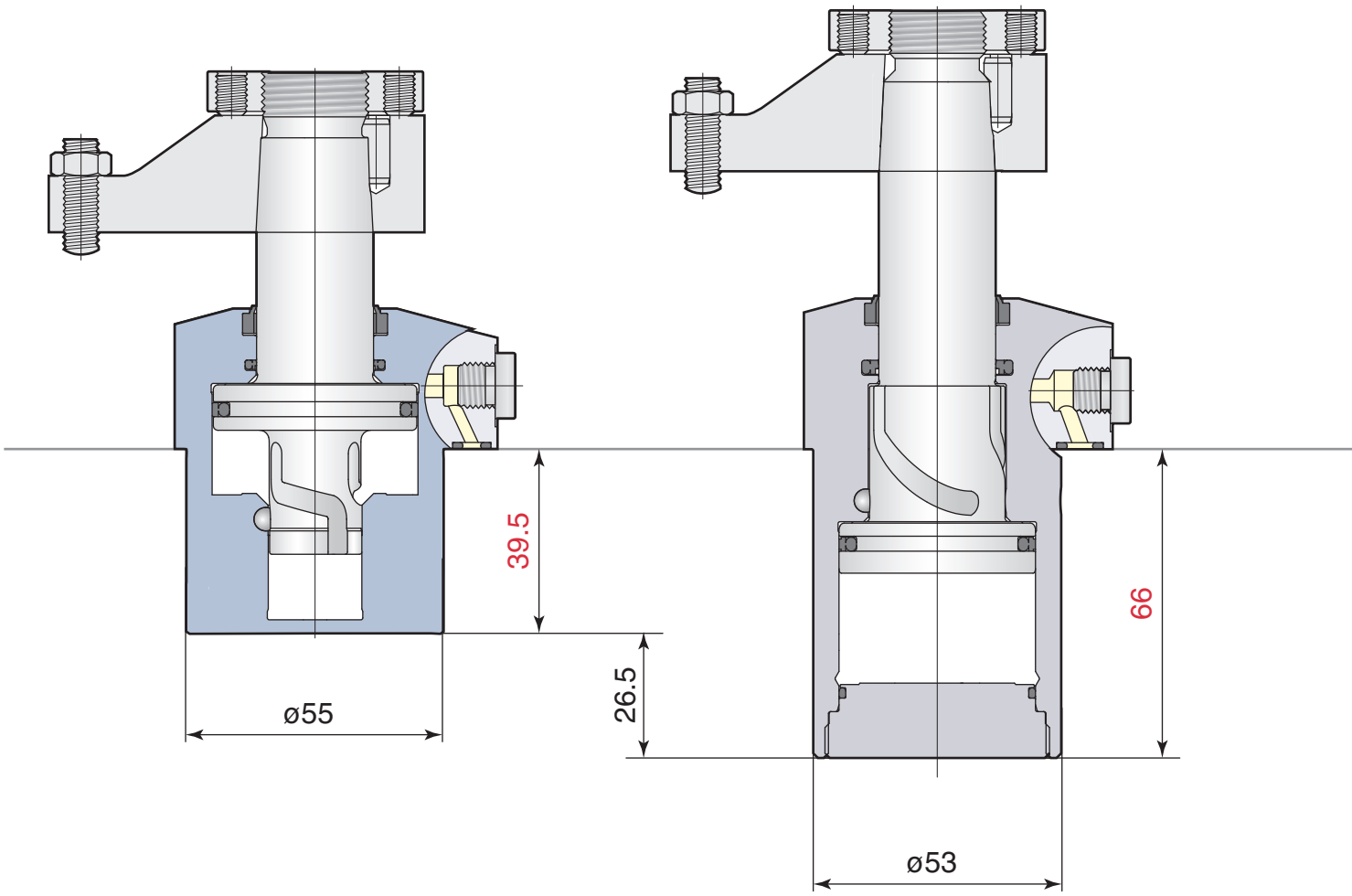

	model **CTM06-N**	model **CTU06**
Cylinder force (at 7MPa)	7.2 kN	6.3 kN
Clamp stroke	5 mm	10 mm

Super compact body

Enables a jig to be compact and simple structure with an excellent sensor function

3 point sensor model

Clamp, Unclamp, Over clamp stroke (Incomplete clamp) detection

Air sensor model

Clamp, Unclamp detection

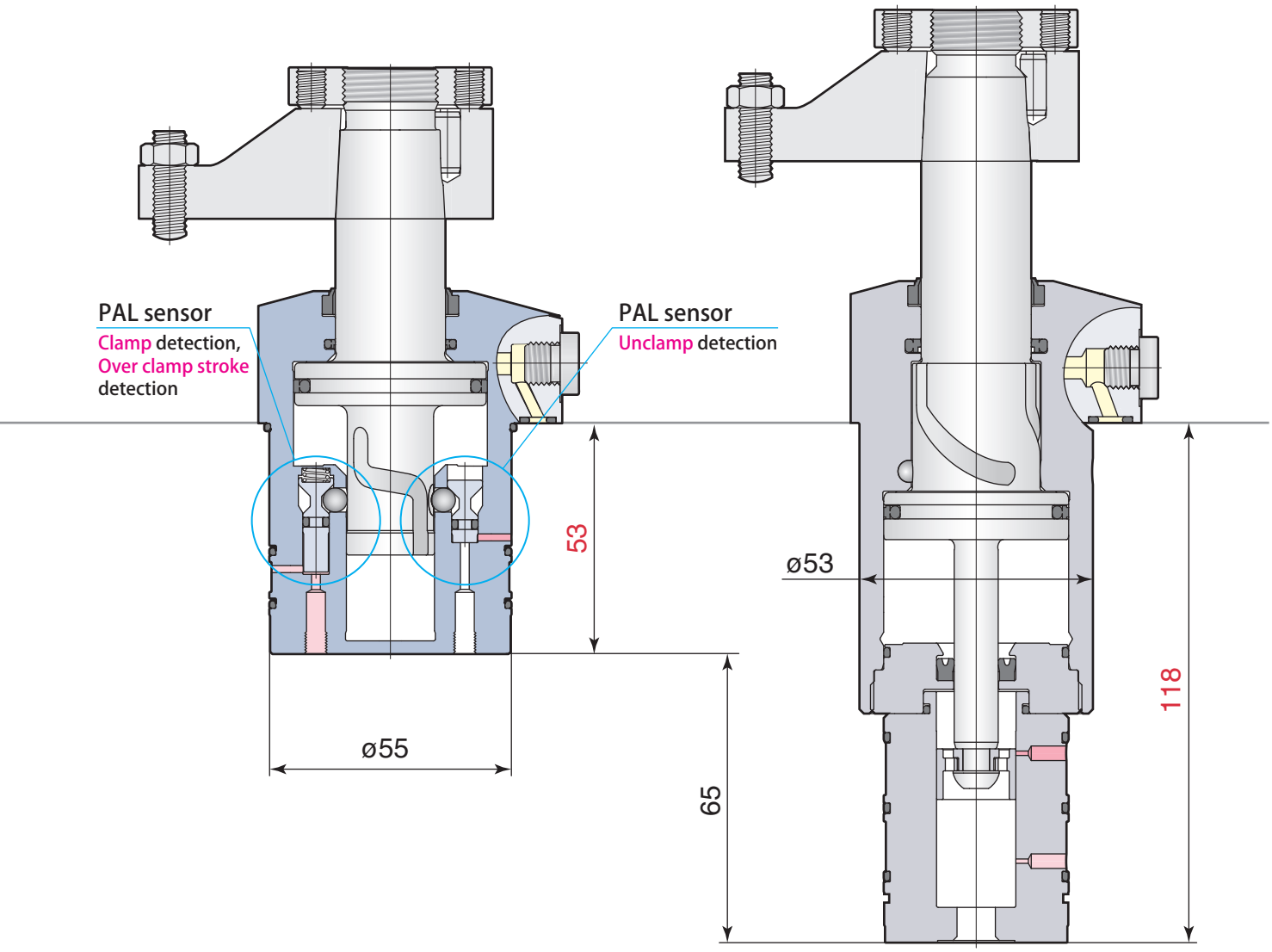

model CTM06-T	model CTU06-A
7.2 kN	6.3 kN
5 mm	10 mm

Table of contents

Features 8

Structure, Hydraulic and pneumatic circuit diagram 10

Specifications 12

Piping 13

Performance table 14

Swing speed adjustment 16

3 point sensor model **CTM-T**
- PAL sensor function and structure 18
- Sensor signal detection 20
- Short stroke **CTM-T** Dimensions 22
- Long stroke **CTM-ST** Dimensions 26

Clamp sensor model **CTM-C**
- PAL sensor function and structure 32
- Sensor signal detection 34
- Short stroke **CTM-C** Dimensions 36
- Long stroke **CTM-SC** Dimensions 40

Unclamp sensor model **CTM-B**
- PAL sensor function and structure 47
- Sensor signal detection 48
- Short stroke **CTM-B** Dimensions 50
- Long stroke **CTM-SB** Dimensions 54

Compact model **CTM-N**
- Short stroke **CTM-N** Dimensions 60
- Long stroke **CTM-SN** Dimensions 64

Clamp arm mounting details 69

Option
- Taper sleeve **CTH-MS** 70
- Perfect nut **CTH-MN** 73
- Perfect release nut **CTH-MNR** 75
- Quick arm change **CTH-BQ** 80

Mounting & dismounting of clamp arm 92

Flow control valve **VCF** 94

Air bleeding valve **VCE** 96

Sensing Swing clamp

Double acting 7 MPa

model CTM

3 point sensor model
model CTM06-LT

Clamp sensor model
model CTM06-LC

Unclamp sensor model
model CTM06-LB

Compact model
model CTM06-LN

Sensing Swing clamp model CTM

The extremely small sensing clamp can detect the loading miss and setting miss of a workpiece firmly.

3 point sensor model

Clamp sensor model

Unclamp sensor model

- Sensor model can prevent tool breakage and defective machining due to incomplete clamp. (Figure 1)
- Unclamp PAL sensor moves along with the piston rod and can positively detect unclamping point, thereby enabling a high-speed production line by fully synchronizing operation with workpiece lifters.
- Built-in sensors enable a compact and simple jig.
- Unclamp detection failure due to the metal chips deposit on an independent external detector can be reduced. (Figure 2)

Figure 1

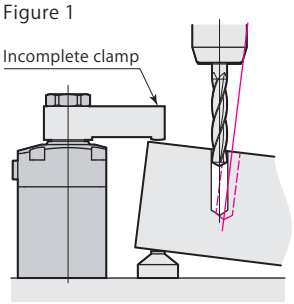

Machining failure due to incomplete clamp

Figure 2

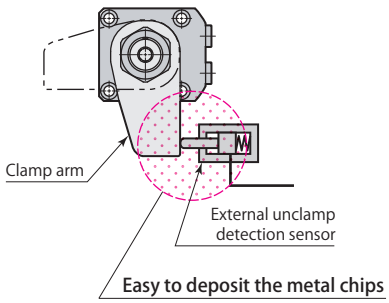

3 point sensor model

Clamp, Unclamp, Over clamp stroke (Incomplete clamp) detection

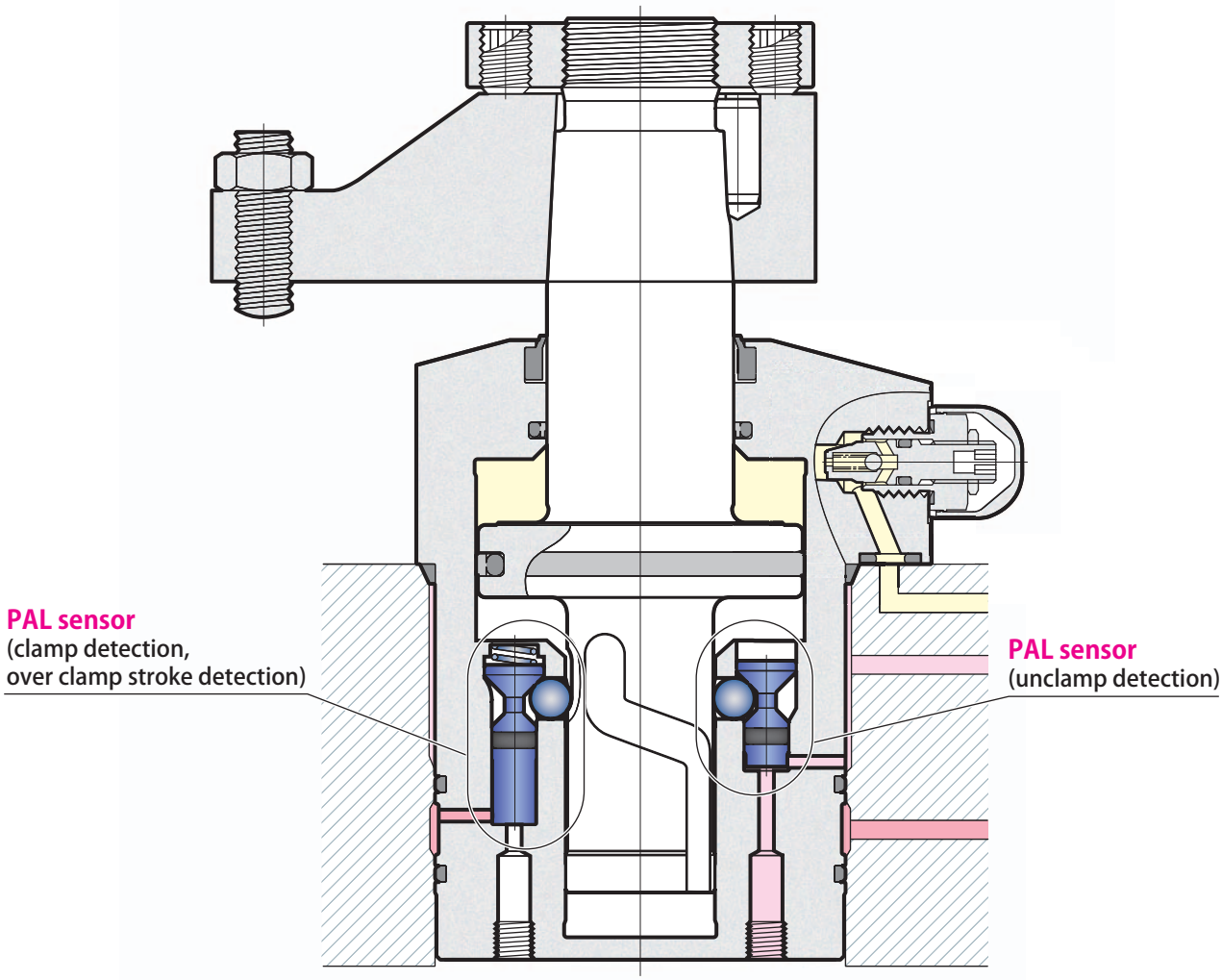

Clamp sensor model

Clamp, Over clamp stroke (Incomplete clamp) detection

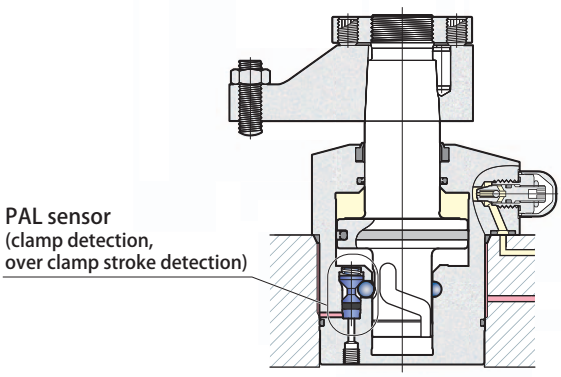

Unclamp sensor model

Unclamp detection

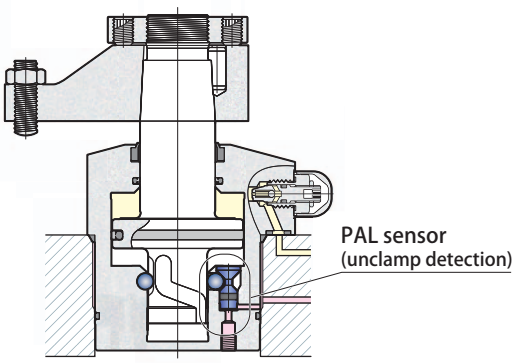

3 point sensor model T

Clamp, Unclamp, Over clamp stroke (Incomplete clamp) detection

model **CTM□-□□T** PAT.

The 3 point sensor model can detect the status of clamp, unclamp and over clamp stroke with just 2 circuits of air.

Refer to **pages →18–21** for the details.

Clamp sensor model C

Clamp, Over clamp stroke (Incomplete clamp) detection

model **CTM□-□□C** PAT.

The clamp sensor model can detect the status of clamp and over clamp stroke with just 1 circuit of air.

Refer to **pages →32–35** for the details.

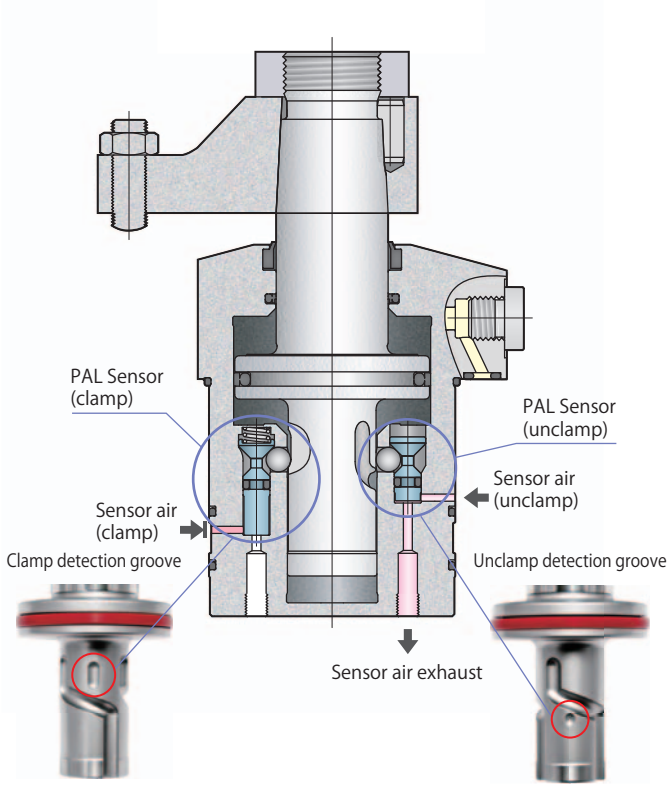

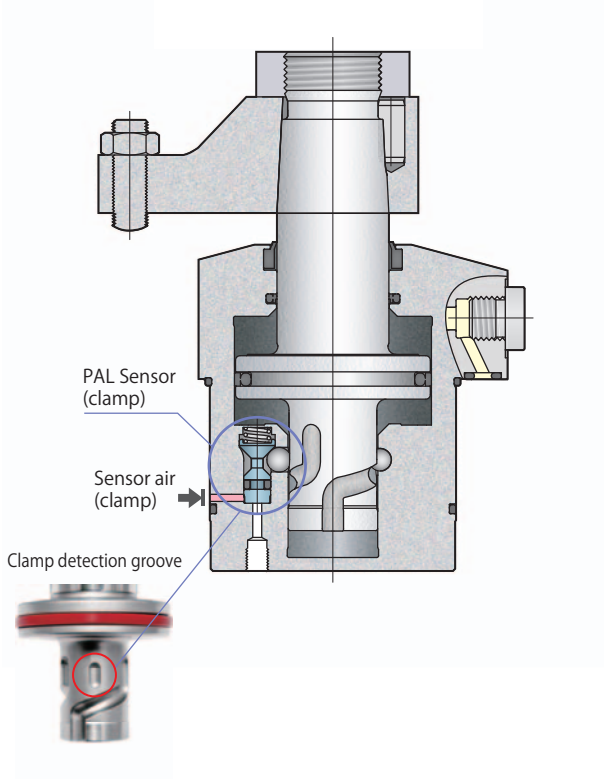

Hydraulic and pneumatic circuit diagram

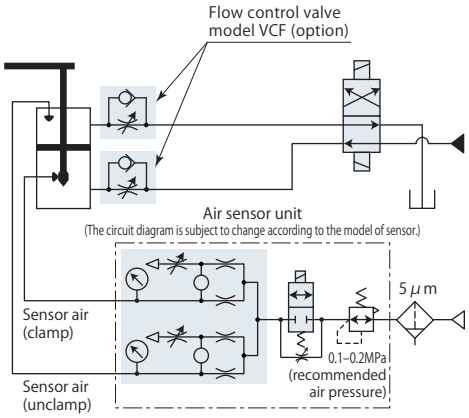

Hydraulic and pneumatic circuit diagram

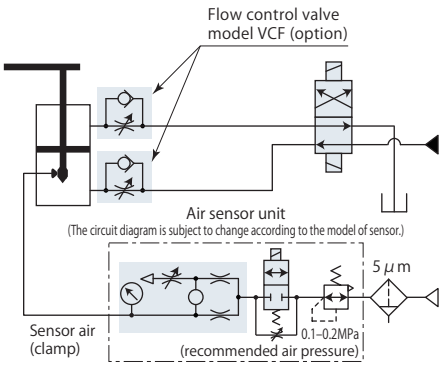

Specifications	page → 12
Piping	page → 13
PAL sensor	page → 18
Short stroke	page → 22
Long stroke	page → 26

Specifications	page → 12
Piping	page → 13
PAL sensor	page → 32
Short stroke	page → 36
Long stroke	page → 40

Unclamp sensor model B

model **CTM□-□□B** PAT.

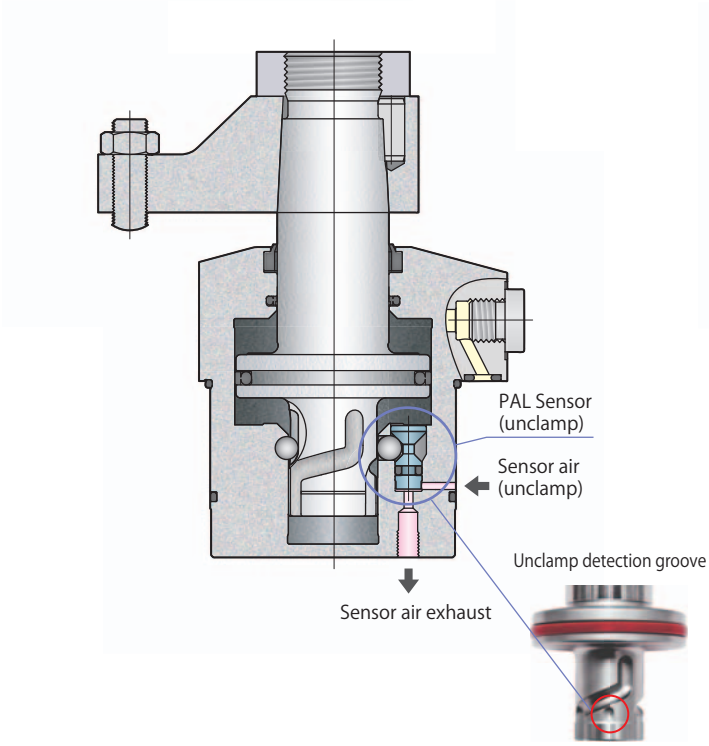

Hydraulic and pneumatic circuit diagram

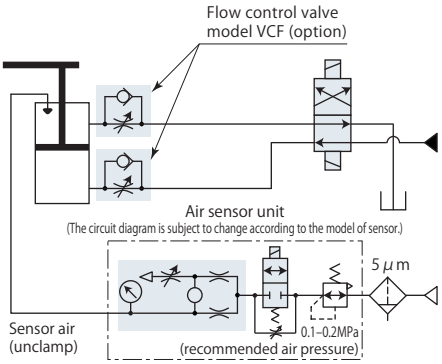

Specifications page → 12
Piping page → 13
PAL sensor page → 47
Short stroke page → 50
Long stroke page → 54

Compact model N

model **CTM□-□□N** JP PAT.

No sensors available on compact model

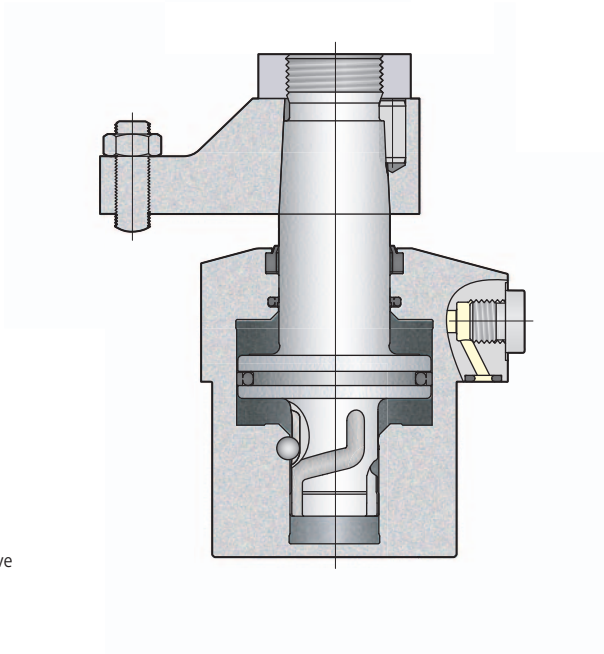

Hydraulic circuit diagram

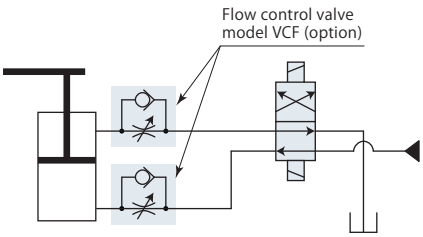

Specifications page → 12
Piping page → 13
Short stroke page → 60
Long stroke page → 64

CTM□-□□□	Swing clamp	7MPa	Double acting

Specifications

CTM —

Size
- 03*1
- 04
- 05
- 06
- 10
- 16*2

Swing direction (when clamping)
- **L** : Counter-clockwise
- **R** : Clockwise

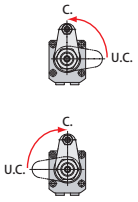

Clamp stroke
- (Nil) : 5mm
- S10 : 10mm
- S20*3 : 20mm
- S30*3 : 30mm

- **T** : 3 point sensor model
  Clamp, Unclamp, Over clamp stroke (Incomplete clamp) detection
- **C** : Clamp sensor model
  Clamp, Over clamp stroke (Incomplete clamp) detection
- **B** : Unclamp sensor model
- **N** : Compact model

*1 : For compact model only (CTM03-□□N).
*2 : For long stroke only (CTM16-□S□□).
*3 : CTM□-□S20T, CTM□-□S20C, CTM□-□S30T, CTM□-□S30C are made to order.
Contact Pascal for more details about swing angle 30, 45 and 60 degrees, pin rod and bottom piping.

Model		Size	CTM03			CTM04			CTM05			CTM06				CTM10				CTM16		
		Clamp stroke	5	10	20	5	10	20	5	10	20	5	10	20	30	5	10	20	30	10	20	30
Cylinder force (hydraulic pressure 7MPa)		kN	2.5			3.5			4.9			7.2				9.4				14.2		
Cylinder inner diameter		mm	26			31			37			44				51				62		
Rod diameter		mm	15			18			22			25				30				35.5		
Effective area (clamp)		cm^2	3.5			5.00			6.95			10.3				13.4				20.3		
Swing angle			90° ±3°																			
Positioning pin groove position accuracy			±1°																			
Repeated clamp positioning accuracy			±0.5°																			
Full stroke	CTM□-□□T, C	mm	–			12	17	27	13	18	28	14	19	29	39	15.5	20.5	30.5	40.5	22.5	32.5	42.5
	CTM□-□□B, N	mm	10.5	15.5	25.5	11.5	16.5	26.5	12.5	17.5	27.5	13.5	18.5	28.5	38.5	15	20	30	40	22	32	42
90° swing stroke		mm	5.5			6.5			7.5			8.5				10				12		
Over clamp stroke (CTM□-□□T, C)		mm	–			0.5																
Mass	CTM□-□□T	kg	–			0.9	0.9	1.0	1.2	1.3	1.4	1.8	1.9	2.1	2.3	2.7	2.8	3.1	3.5	4.2	4.7	5.2
	CTM□-□□C	kg	–			0.8	0.8	1.0	1.1	1.2	1.4	1.6	1.7	2.0	2.3	2.4	2.6	3.0	3.4	4.1	4.6	5.1
	CTM□-□□B, N	kg	0.6	0.6	0.8	0.7	0.8	1.0	1.1	1.2	1.4	1.5	1.7	2.0	2.3	2.4	2.6	3.0	3.4	4.1	4.6	5.1
Recommended tightening torque of mounting screws*		N·m	3.5			7			7			12				12				29		
Recommended tightening torque of nut		N·m	22			35			60			100				155				260		

- Pressure range : 1.5–7 MPa
- Proof pressure : 10.5 MPa
- Operating temperature : 0–70 ℃
- Fluid used : General mineral based hydraulic oil (ISO-VG32 equivalent)
- Seals are resistant to chlorine-based cutting fluid. (not thermal resistant specification)

*: ISO R898 class 12.9

Clamping must be done within the range of clamp stroke.

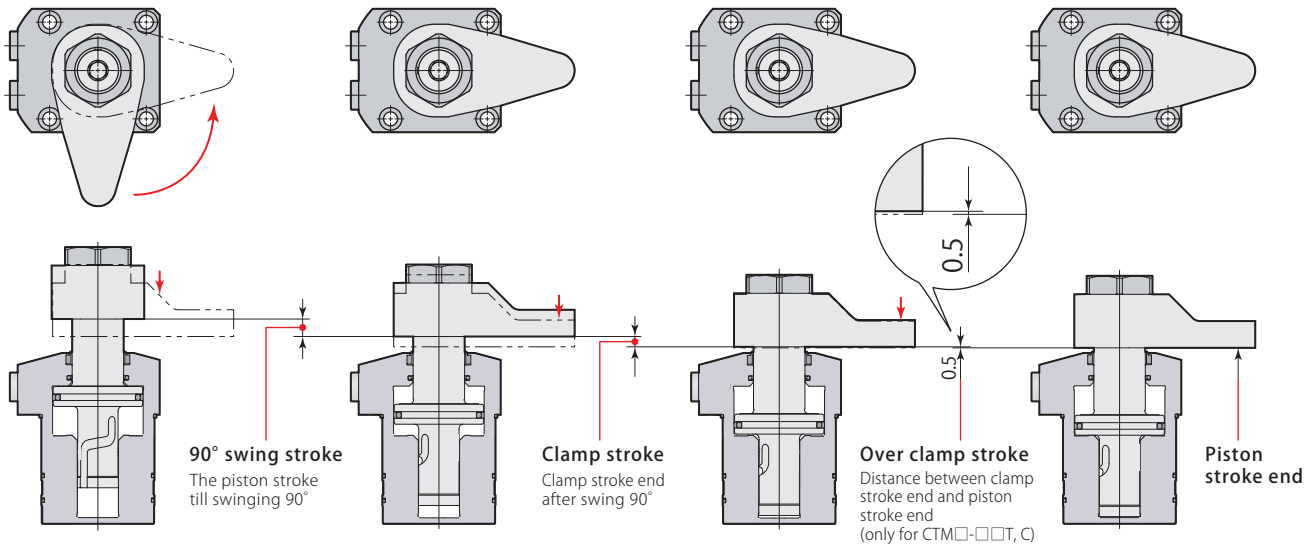

Manifold piping and G port piping are available.

Manifold piping

When choosing manifold piping, a flow control valve (model VCF) and an air bleeding valve (model VCE) are mountable on the G ports of the clamp.

G port piping

Remove plugs when choosing G port piping. (O-ring must be used.) Refer to **page →220** for details on G port piping flareless fitting. The flow control valve and the air bleeding valve should be installed in the middle of oil path.

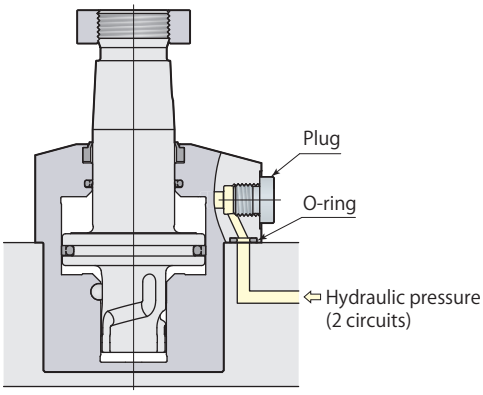

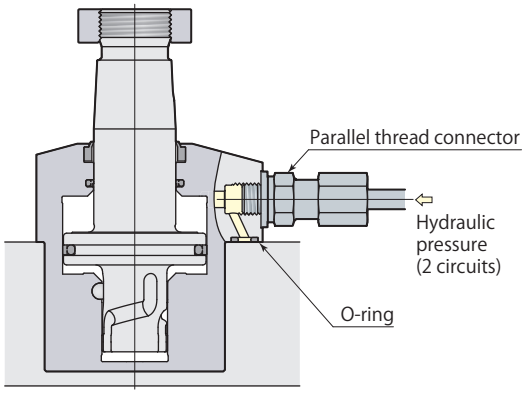

Flow control valve model VCF

Page →94

Air bleeding valve model VCE

Page →96

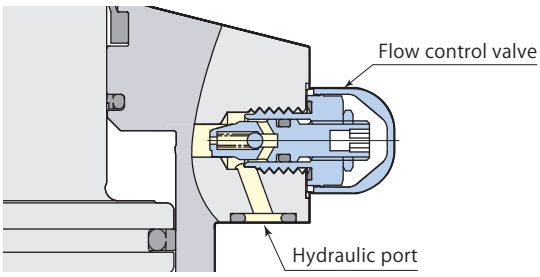

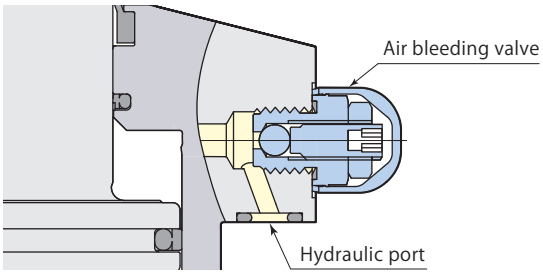

● In case of mounting flow control valve model VCF on the G port of the clamp, air bleeding valve should be installed in the piping to the clamp. (VCE Mounting details. Refer to **page →96**)

CTM□-□□	Swing clamp Short stroke	7MPa Double acting

Performance table

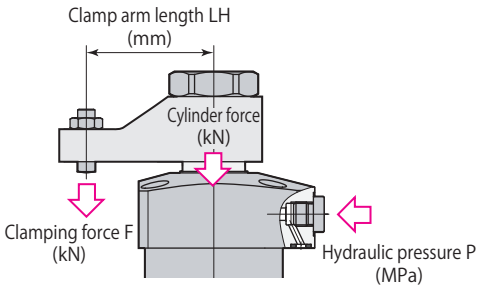

Clamping force varies depending on the clamp arm length (LH) and hydraulic pressure (P).

Clamping force calculation formula
F＝P/(Coefficient 1＋Coefficient 2×LH)
F：Clamping force　P：Hydraulic pressure　LH：Clamp arm length

CTM06 with clamp arm length (LH) = 50 mm at hydraulic pressure of 7 MPa, Clamping force F is calculated by
7/(0.971+0.00427×50)＝5.9 kN

Do not use the clamp in the nonusable range. It may cause damage to the cylinder and rod.

model CTM03　Clamping force　F=P/(2.82+0.0153×LH)

Hydraulic pressure MPa	Cylinder force kN	Clamping force kN / Clamp arm length LH mm								Max. arm length Max. LH mm
		30	40	50	60	70	80	100	120	
7	2.5	2.1	2.0	2.0	1.9	1.8	1.7	Nonusable range		85
6.5	2.3	2.0	1.9	1.8	1.7	1.7	1.6			95
6	2.1	1.8	1.7	1.7	1.6	1.5	1.5	1.4		108
5.5	1.9	1.7	1.6	1.5	1.5	1.4	1.4	1.3		125
5	1.8	1.5	1.5	1.4	1.3	1.3	1.2	1.1	1.1	148
4.5	1.6	1.4	1.3	1.3	1.2	1.2	1.1	1.0	1.0	182
4	1.4	1.2	1.2	1.1	1.1	1.0	1.0	0.9	0.9	↑
3.5	1.2	1.1	1.0	1.0	0.9	0.9	0.9	0.8	0.8	↑
3	1.1	0.9	0.9	0.8	0.8	0.8	0.7	0.7	0.6	↑
2.5	0.9	0.8	0.7	0.7	0.7	0.6	0.6	0.6	0.5	↑
2	0.7	0.6	0.6	0.6	0.5	0.5	0.5	0.5	0.4	↑
1.5	0.5	0.5	0.4	0.4	0.4	0.4	0.4	0.3	0.3	182

model CTM04　Clamping force　F=P/(2.00+0.0101×LH)

Hydraulic pressure MPa	Cylinder force kN	Clamping force kN / Clamp arm length LH mm								Max. arm length Max. LH mm
		40	50	60	70	80	100	120	140	
7	3.5	2.9	2.8	2.7						64
6.5	3.3	2.7	2.6	2.5	2.4					71
6	3.0	2.5	2.4	2.3	2.2	Nonusable range				79
5.5	2.8	2.3	2.2	2.1	2.0	2.0				89
5	2.5	2.1	2.0	1.9	1.8	1.8	1.7			103
4.5	2.3	1.9	1.8	1.7	1.7	1.6	1.5	1.4		121
4	2.0	1.7	1.6	1.5	1.5	1.4	1.3	1.2	1.2	148
3.5	1.8	1.5	1.4	1.3	1.3	1.2	1.2	1.1	1.0	189
3	1.5	1.2	1.2	1.2	1.1	1.1	1.0	0.9	0.9	↑
2.5	1.3	1.0	1.0	1.0	0.9	0.9	0.8	0.8	0.7	↑
2	1.0	0.8	0.8	0.8	0.7	0.7	0.7	0.6	0.6	↑
1.5	0.8	0.6	0.6	0.6	0.6	0.5	0.5	0.5	0.4	189

model CTM05　Clamping force　F=P/(1.44+0.00726×LH)

Hydraulic pressure MPa	Cylinder force kN	Clamping force kN / Clamp arm length LH mm								Max. arm length Max. LH mm
		50	60	80	100	120	140	160	180	
7	4.9	3.9	3.7							79
6.5	4.5	3.6	3.5	3.2						87
6	4.2	3.3	3.2	3.0	Nonusable range					98
5.5	3.8	3.1	2.9	2.7	2.5					112
5	3.5	2.8	2.7	2.5	2.3	2.2				131
4.5	3.1	2.5	2.4	2.2	2.1	1.9	1.8			157
4	2.8	2.2	2.1	2.0	1.8	1.7	1.6	1.5	1.5	196
3.5	2.4	1.9	1.9	1.7	1.6	1.5	1.4	1.3	1.3	↑
3	2.1	1.7	1.6	1.5	1.4	1.3	1.2	1.2	1.1	↑
2.5	1.7	1.4	1.3	1.2	1.2	1.1	1.0	1.0	0.9	↑
2	1.4	1.1	1.1	1.0	0.9	0.9	0.8	0.8	0.7	↑
1.5	1.0	0.8	0.8	0.7	0.7	0.6	0.6	0.6	0.5	196

model CTM06　Clamping force　F=P/(0.971+0.00427×LH)

Hydraulic pressure MPa	Cylinder force kN	Clamping force kN / Clamp arm length LH mm								Max. arm length Max. LH mm
		50	60	80	100	120	140	160	180	
7	7.2	5.9	5.7	5.3						87
6.5	6.7	5.5	5.3	5.0						96
6	6.2	5.1	4.9	4.6	4.3	Nonusable range				108
5.5	5.7	4.6	4.5	4.2	3.9	3.7				124
5	5.1	4.2	4.1	3.8	3.6	3.4	3.2			144
4.5	4.6	3.8	3.7	3.4	3.2	3.0	2.9	2.7		172
4	4.1	3.4	3.3	3.0	2.9	2.7	2.5	2.4	2.3	203
3.5	3.6	3.0	2.9	2.7	2.5	2.4	2.2	2.1	2.0	281
3	3.1	2.5	2.4	2.3	2.1	2.0	1.9	1.8	1.7	↑
2.5	2.6	2.1	2.0	1.9	1.8	1.7	1.6	1.5	1.4	↑
2	2.1	1.7	1.6	1.5	1.4	1.3	1.3	1.2	1.1	↑
1.5	1.5	1.3	1.2	1.1	1.1	1.0	1.0	0.9	0.9	281

model CTM10　Clamping force　F=P/(0.749+0.00299×LH)

Hydraulic pressure MPa	Cylinder force kN	Clamping force kN / Clamp arm length LH mm								Max. arm length Max. LH mm
		60	80	100	120	140	160	180	200	
7	9.4	7.5	7.1							88
6.5	8.7	7.0	6.6							98
6	8.0	6.5	6.1	5.7	Nonusable range					110
5.5	7.3	5.9	5.6	5.2	5.0					125
5	6.7	5.4	5.1	4.8	4.5	4.3				144
4.5	6.0	4.8	4.6	4.3	4.1	3.9	3.7			171
4	5.3	4.3	4.0	3.8	3.6	3.4	3.3	3.1	3.0	211
3.5	4.7	3.8	3.5	3.3	3.2	3.0	2.9	2.7	2.6	273
3	4.0	3.2	3.0	2.9	2.7	2.6	2.4	2.3	2.2	↑
2.5	3.3	2.7	2.5	2.4	2.3	2.1	2.0	1.9	1.9	↑
2	2.7	2.2	2.0	1.9	1.8	1.7	1.6	1.6	1.5	↑
1.5	2.0	1.6	1.5	1.4	1.4	1.3	1.2	1.2	1.1	273

model CTM03-□S

Clamping force F=P/(2.82+0.0131×LH)

Hydraulic pressure MPa	Cylinder force kN	Clamping force kN / Clamp arm length LH mm								Max. arm length Max. LH mm
		30	40	50	60	70	80	100	120	
7	2.5	2.2	2.1	2.0	1.9	1.9	1.8	1.7	Nonusable range	110
6.5	2.3	2.0	1.9	1.9	1.8	1.7	1.7	1.6	1.5	120
6	2.1	1.9	1.8	1.7	1.7	1.6	1.5	1.5	1.4	140
5.5	1.9	1.7	1.6	1.6	1.5	1.5	1.4	1.3	1.3	160
5	1.8	1.6	1.5	1.4	1.4	1.3	1.3	1.2	1.1	↑
4.5	1.6	1.4	1.3	1.3	1.2	1.2	1.2	1.1	1.0	↑
4	1.4	1.2	1.2	1.2	1.1	1.1	1.0	1.0	0.9	↑
3.5	1.2	1.1	1.0	1.0	1.0	0.9	0.9	0.8	0.8	↑
3	1.1	0.9	0.9	0.9	0.8	0.8	0.8	0.7	0.7	↑
2.5	0.9	0.8	0.7	0.7	0.7	0.7	0.6	0.6	0.6	↑
2	0.7	0.6	0.6	0.6	0.6	0.5	0.5	0.5	0.5	↑
1.5	0.5	0.5	0.4	0.4	0.4	0.4	0.4	0.4	0.3	160

model CTM04-□S

Clamping force F=P/(2.00+0.00755×LH)

Hydraulic pressure MPa	Cylinder force kN	Clamping force kN / Clamp arm length LH mm								Max. arm length Max. LH mm
		40	50	60	70	80	100	120	140	
7	3.5	3.0	2.9	2.9	2.8	Nonusable range				74
6.5	3.3	2.8	2.7	2.6	2.6	2.5	Nonusable range			81
6	3.0	2.6	2.5	2.4	2.4	2.3				90
5.5	2.8	2.4	2.3	2.2	2.2	2.1	2.0			101
5	2.5	2.2	2.1	2.0	2.0	1.9	1.8			116
4.5	2.3	2.0	1.9	1.8	1.8	1.7	1.6	1.5		135
4	2.0	1.7	1.7	1.6	1.6	1.5	1.5	1.4	1.3	163
3.5	1.8	1.5	1.5	1.4	1.4	1.3	1.3	1.2	1.1	↑
3	1.5	1.3	1.3	1.2	1.2	1.2	1.1	1.0	1.0	↑
2.5	1.3	1.1	1.1	1.0	1.0	1.0	0.9	0.9	0.8	↑
2	1.0	0.9	0.8	0.8	0.8	0.8	0.7	0.7	0.7	↑
1.5	0.8	0.7	0.6	0.6	0.6	0.6	0.5	0.5	0.5	163

model CTM05-□S

Clamping force F=P/(1.44+0.00543×LH)

Hydraulic pressure MPa	Cylinder force kN	Clamping force kN / Clamp arm length LH mm								Max. arm length Max. LH mm
		50	60	80	100	120	140	160	180	
7	4.9	4.1	4.0	3.7	3.5	Nonusable range				105
6.5	4.5	3.8	3.7	3.5	3.3					117
6	4.2	3.5	3.4	3.2	3.0	2.9				131
5.5	3.8	3.2	3.1	2.9	2.8	2.6	2.5			150
5	3.5	2.9	2.8	2.7	2.5	2.4	2.3	2.2		175
4.5	3.1	2.6	2.5	2.4	2.3	2.2	2.0	1.9	1.9	209
4	2.8	2.3	2.3	2.1	2.0	1.9	1.8	1.7	1.7	261
3.5	2.4	2.0	2.0	1.9	1.8	1.7	1.6	1.5	1.4	↑
3	2.1	1.8	1.7	1.6	1.5	1.4	1.4	1.3	1.2	↑
2.5	1.7	1.5	1.4	1.3	1.3	1.2	1.1	1.1	1.0	↑
2	1.4	1.2	1.1	1.1	1.0	1.0	0.9	0.9	0.8	↑
1.5	1.0	0.9	0.8	0.8	0.8	0.7	0.7	0.6	0.6	261

model CTM06-□S

Clamping force F=P/(0.971+0.00333×LH)

Hydraulic pressure MPa	Cylinder force kN	Clamping force kN / Clamp arm length LH mm								Max. arm length Max. LH mm
		50	60	80	100	120	140	160	180	
7	7.2	6.2	6.0	5.7	5.4	Nonusable range				112
6.5	6.7	5.7	5.6	5.3	5.0	4.7				124
6	6.2	5.3	5.1	4.8	4.6	4.4				139
5.5	5.7	4.8	4.7	4.4	4.2	4.0	3.8			159
5	5.1	4.4	4.3	4.0	3.8	3.6	3.5	3.3	3.2	184
4.5	4.6	4.0	3.8	3.6	3.5	3.3	3.1	3.0	2.9	220
4	4.1	3.5	3.4	3.2	3.1	2.9	2.8	2.7	2.5	274
3.5	3.6	3.1	3.0	2.8	2.7	2.6	2.4	2.3	2.2	↑
3	3.1	2.6	2.6	2.4	2.3	2.2	2.1	2.0	1.9	↑
2.5	2.6	2.2	2.1	2.0	1.9	1.8	1.7	1.7	1.6	↑
2	2.1	1.8	1.7	1.6	1.5	1.5	1.4	1.3	1.3	↑
1.5	1.5	1.3	1.3	1.2	1.2	1.1	1.0	1.0	1.0	274

model CTM10-□S

Clamping force F=P/(0.749+0.00238×LH)

Hydraulic pressure MPa	Cylinder force kN	Clamping force kN / Clamp arm length LH mm								Max. arm length Max. LH mm
		60	80	100	120	140	160	180	200	
7	9.4	7.8	7.5	7.1	Nonusable range					111
6.5	8.7	7.3	6.9	6.6	6.3					123
6	8.0	6.7	6.4	6.1	5.8					138
5.5	7.3	6.2	5.9	5.6	5.3	5.1				157
5	6.7	5.6	5.3	5.1	4.8	4.6	4.4	4.2		181
4.5	6.0	5.0	4.8	4.6	4.3	4.2	4.0	3.8	3.7	215
4	5.3	4.5	4.3	4.1	3.9	3.7	3.5	3.4	3.3	265
3.5	4.7	3.9	3.7	3.5	3.4	3.2	3.1	3.0	2.9	↑
3	4.0	3.4	3.2	3.0	2.9	2.8	2.7	2.5	2.4	↑
2.5	3.3	2.8	2.7	2.5	2.4	2.3	2.2	2.1	2.0	↑
2	2.7	2.2	2.1	2.0	1.9	1.8	1.8	1.7	1.6	↑
1.5	2.0	1.7	1.6	1.5	1.4	1.4	1.3	1.3	1.2	265

model CTM16-□S

Clamping force F=P/(0.493+0.00138×LH)

Hydraulic pressure MPa	Cylinder force kN	Clamping force kN / Clamp arm length LH mm								Max. arm length Max. LH mm
		60	80	100	120	140	160	180	200	
7	14.2	12.2	11.6	11.1	10.6	Nonusable range				132
6.5	13.2	11.3	10.8	10.3	9.9	9.5	Nonusable range			147
6	12.2	10.4	9.9	9.5	9.1	8.7	8.4			164
5.5	11.2	9.6	9.1	8.7	8.4	8.0	7.7	7.4		187
5	10.1	8.7	8.3	7.9	7.6	7.3	7.0	6.7	6.5	217
4.5	9.1	7.8	7.5	7.1	6.8	6.6	6.3	6.1	5.9	259
4	8.1	6.9	6.6	6.3	6.1	5.8	5.6	5.4	5.2	↑
3.5	7.1	6.1	5.8	5.5	5.3	5.1	4.9	4.7	4.6	↑
3	6.1	5.2	5.0	4.8	4.6	4.4	4.2	4.0	3.9	↑
2.5	5.1	4.3	4.1	4.0	3.8	3.6	3.5	3.4	3.3	↑
2	4.1	3.5	3.3	3.2	3.0	2.9	2.8	2.7	2.6	↑
1.5	3.0	2.6	2.5	2.4	2.3	2.2	2.1	2.0	2.0	259

Swing speed adjustment

Swing time is restricted by the mass and length of the clamp arm (moment of inertia) since the 90° swing action impacts the cam shaft.

1.Calculate the moment of inertia according to the arm length and mass.

2.Adjust swing speed with flow control valve to ensure that 90° swing time of the clamp arm is greater than the shortest swing time in the graph shown below.

● The cam groove may be damaged in case the swing speed is set at the nonusable range in the graph.

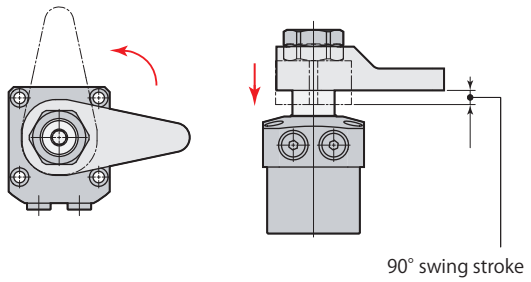

Example of calculation for moment of inertia

$$I=\frac{1}{12}m_1(4A_1^2+B^2)+\frac{1}{12}m_2(4A_2^2+B^2)$$

I : Moment of inertia (kg·m²)

m: Mass (kg)

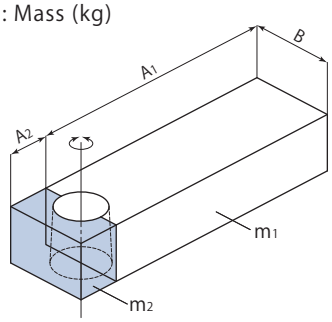

model CTM03

Shortest swing time calculation formula $t=\sqrt{\frac{I}{0.0136}}$

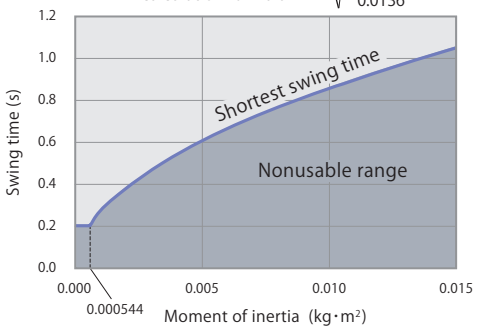

model CTM04

Shortest swing time calculation formula $t=\sqrt{\frac{I}{0.0171}}$

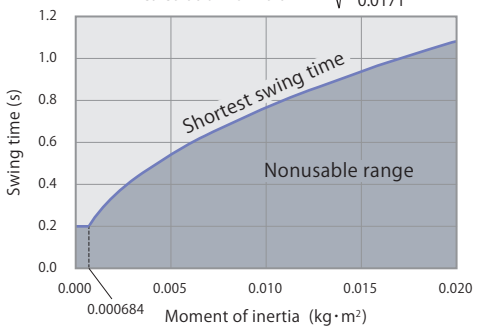

model CTM05

Shortest swing time calculation formula $t=\sqrt{\frac{I}{0.0198}}$

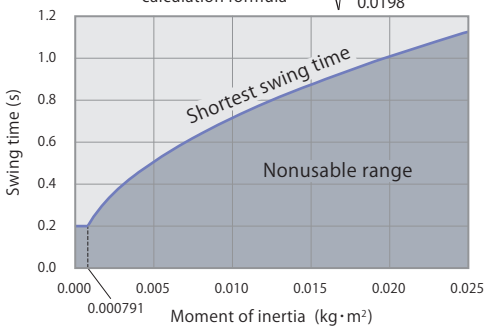

model CTM06

Shortest swing time calculation formula $t=\sqrt{\frac{I}{0.0410}}$

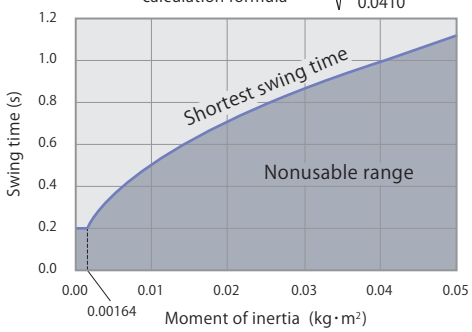

model CTM10

Shortest swing time calculation formula $t=\sqrt{\frac{I}{0.0490}}$

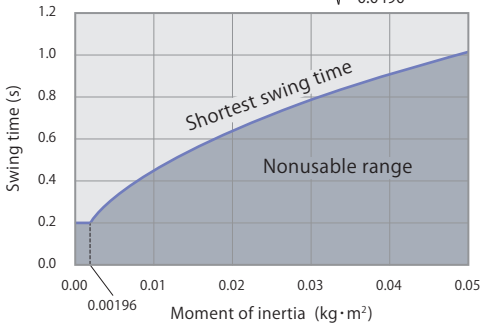

model CTM16

Shortest swing time calculation formula $t=\sqrt{\frac{I}{0.0975}}$

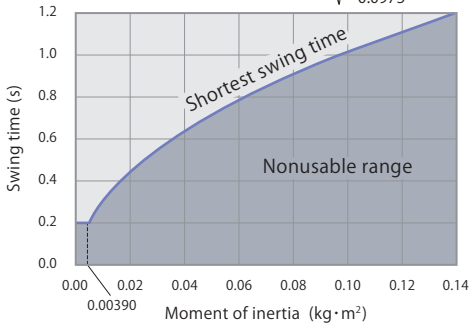

PAL sensor function and structure

Unclamp detection

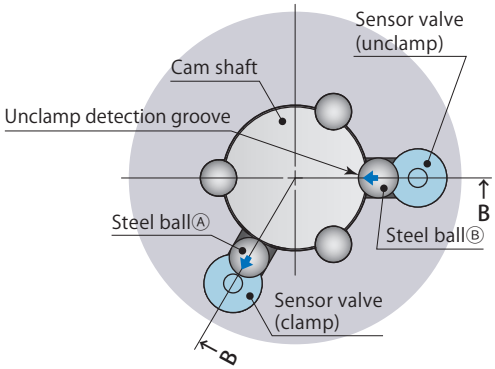

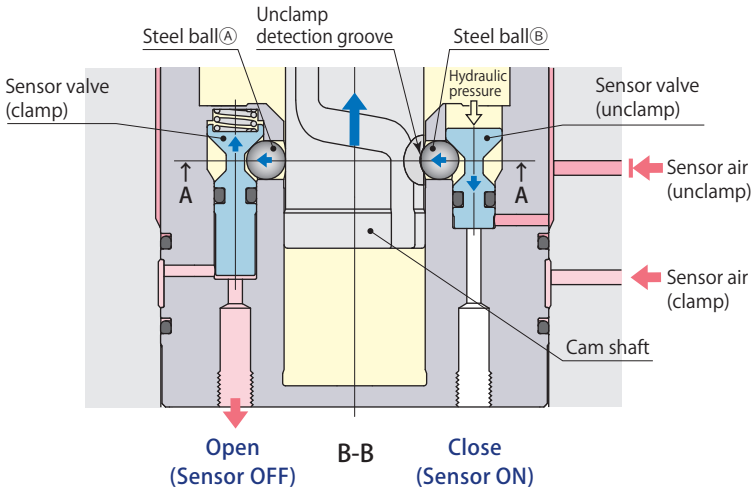

● The steel ball Ⓑ seats in the unclamp detection groove when the cam shaft reaches unclamp end, and a sensor valve (unclamp) is pushed down to shut off the sensor air by hydraulic force. The sensor valve (clamp) is pushed up by the steel ball Ⓐ to open for air exhaust and detects the unclamped condition.

Clamp detection

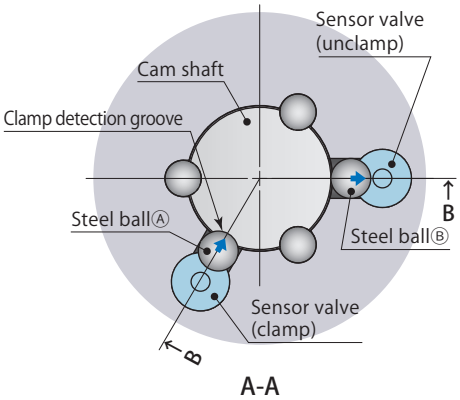

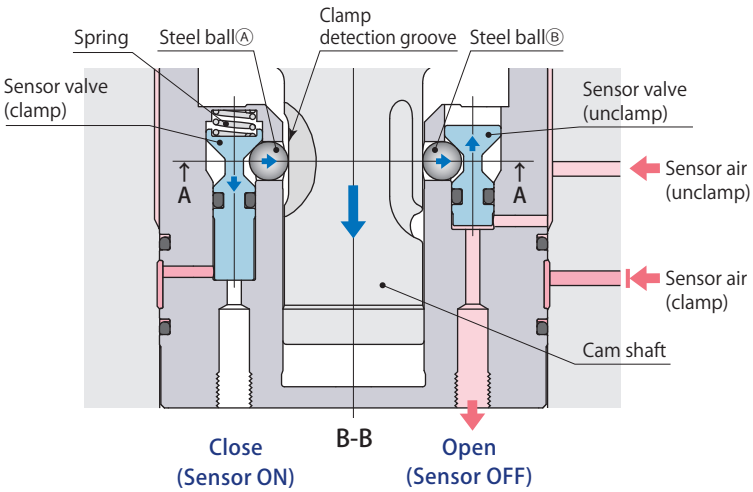

● The steel ball Ⓐ seats in the clamp detection groove when the cam shaft reaches clamping point, and a sensor valve (clamp) is pushed down to shut of the sensor air by a spring. The sensor valve (unclamp) is pushed up by the steel ball Ⓑ to open for air exhaust and detects the clamped condition.

PAL sensor function and structure

Over clamp stroke (Incomplete clamp) detection

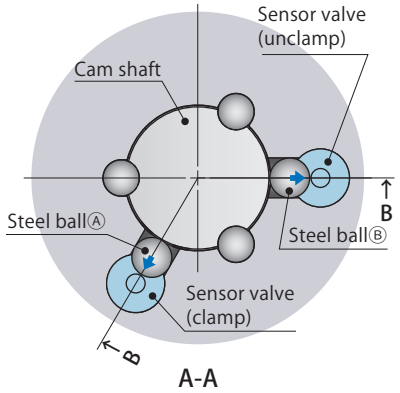

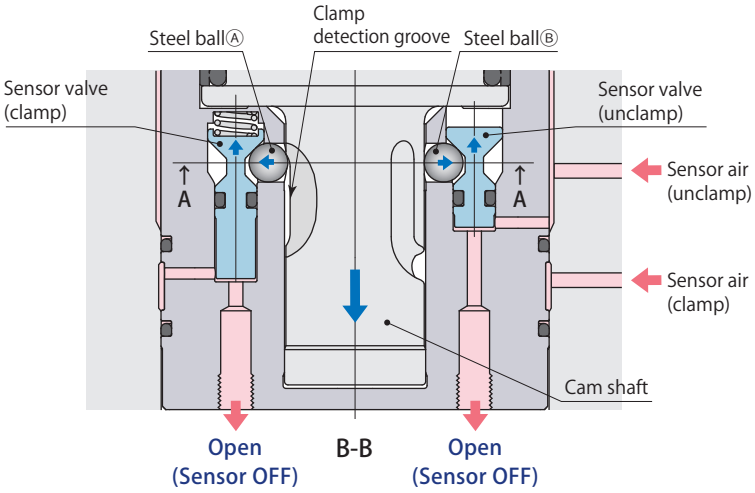

- When the cam shaft passes the clamping point, the sensor valve (clamp) is pushed up by the steel ball Ⓐ to open for air exhaust. The sensor valve (unclamp) is pushed up by the steel ball Ⓑ to open for air exhaust and detects the over clamp stroked (incomplete clamp) condition.

Over clamp stroke (Incomplete clamp) detection example

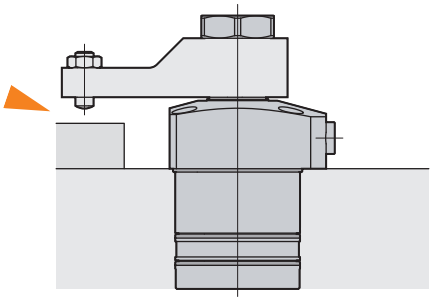

- Clamp disabled due to mis-setting workpiece.

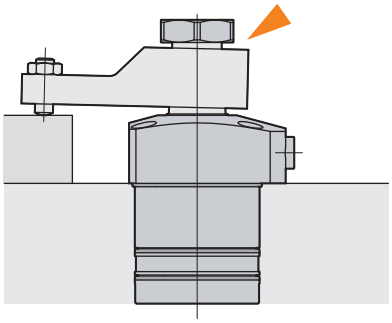

- Clamp disabled due to the damage of piston rod or loose clamp arm.

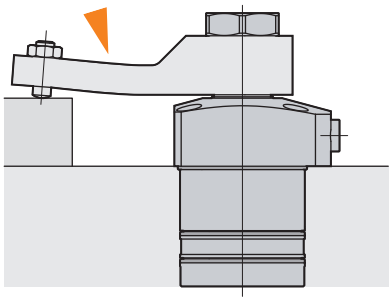

- Clamp disabled due to the deflection of clamp arm.
- Clamp disabled due to the abrasion on the tip of clamp arm during prolonged use.

Clamp, Unclamp, Over clamp stroke detection signal

Unclamp detection

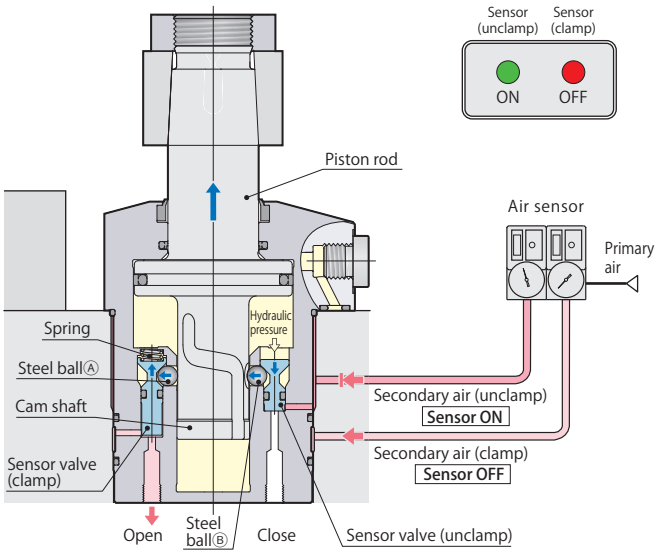

Sensor signal (unclamp)	ON	Unclamp
Sensor signal (clamp)	OFF	

In the middle of swing stroke

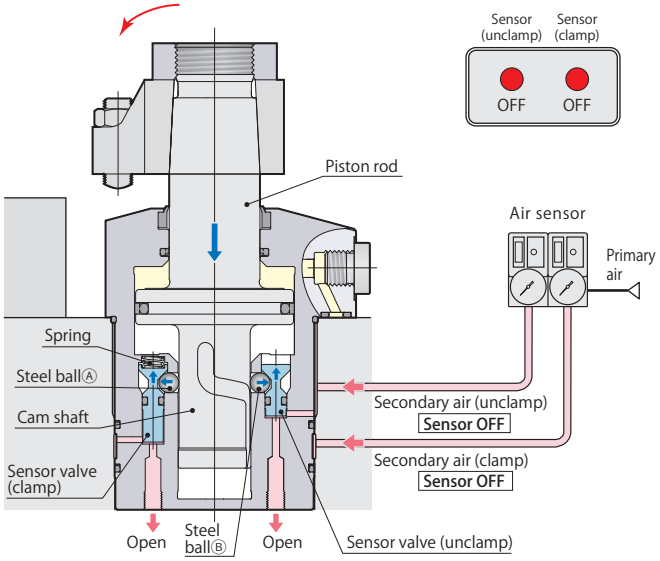

Sensor signal (unclamp)	OFF	In the middle of swing stroke
Sensor signal (clamp)	OFF	

Clamp detection

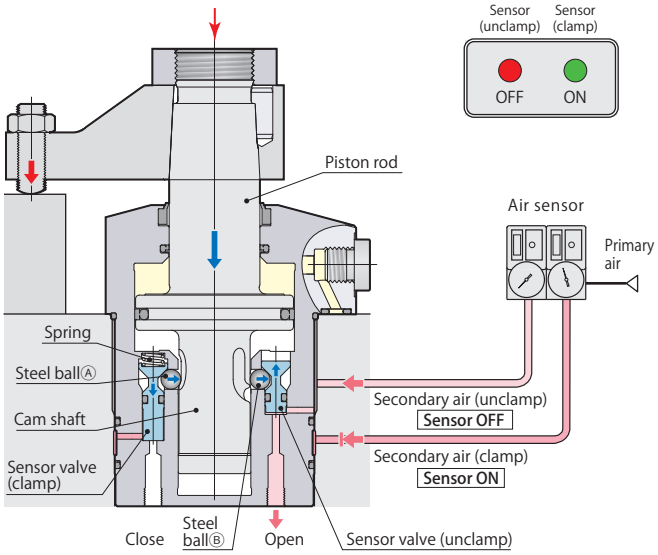

Sensor signal (unclamp)	OFF	Clamp
Sensor signal (clamp)	ON	

Over clamp stroke (Incomplete clamp) detection

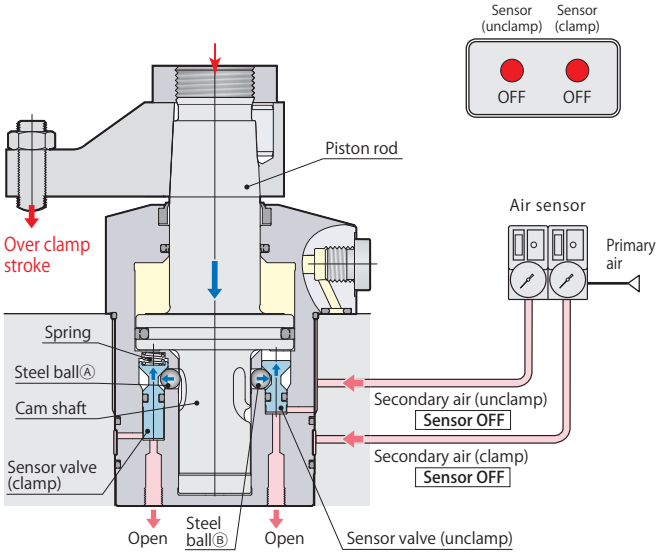

Sensor signal (unclamp)	OFF	Over clamp stroke (Incomplete clamp)
Sensor signal (clamp)	OFF	

Air sensor triggering point

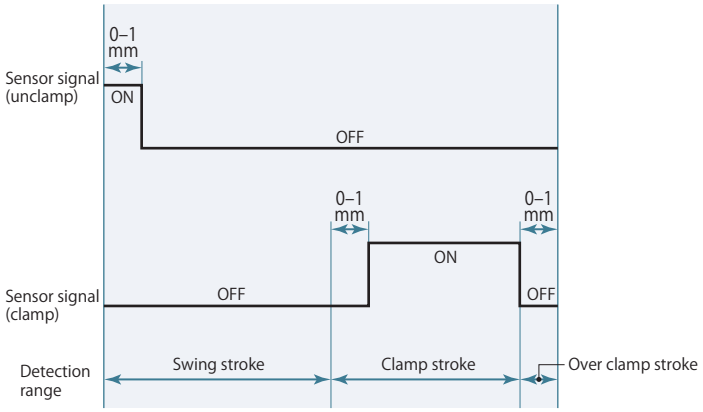

- Refer to the sensor supplier's instruction manual for the details of setting.
- Sensing performance such as detectable time and pressure differs depending on the supplier and model number of the sensor. Select the right model referring to sensor's application and characteristics.

Air sensor unit recommended condition of use

Supplier and model	ISA3-F/G series manufactured by SMC
	GPS2-05, GPS3-E series manufactured by CKD
Air supply pressure	0.1–0.2 MPa
Inner diameter of piping	ø4 mm (ISA3-F：ø2.5 mm)
Overall piping length	5 m or less

- Supply the dry and filtered air. Particulate size 5 μm or less is recommended.
- Use a solenoid valve with needle for air sensor unit and control it supplying air all the time in order to eliminate intrusion of chips or coolant.
- There is a case that air sensing cannot be successfully made as designed when it is used out of the above usage. Contact Technical service center for more details.

Relation between sensor air pressure, PAL sensor and piston stroke

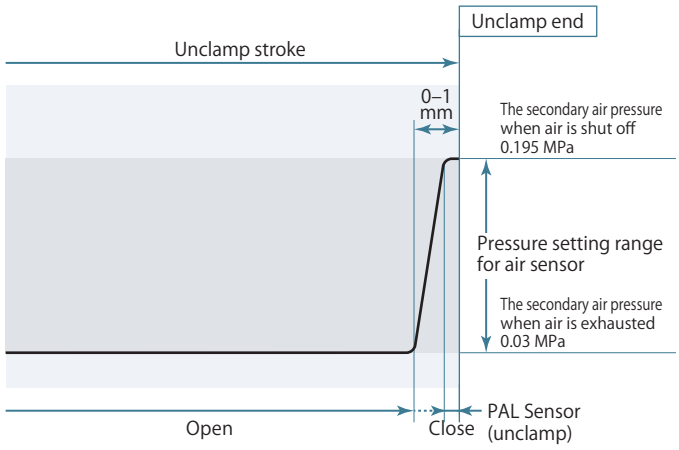

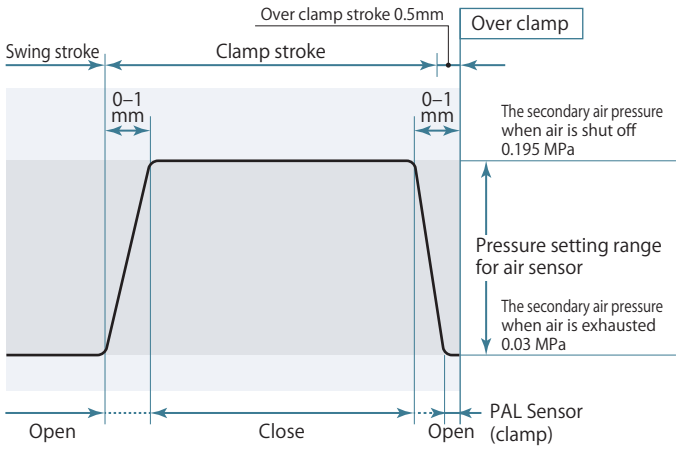

The diagram shown on the left indicates the relation between the PAL sensor, piston stroke, and secondary air pressure. (The pressure shown in the diagram is a reference based on the 0.2 MPa of primary air pressure for one piece of clamp.)

Since the new PAL sensor works with less air-leakage compared to previous sensor valve,

- Enhances the pressure setting range of the sensor which enables the sensor to set easily.
  (Ex. Pressure setting range 0.03–0.195 MPa in the diagram)
- Allows the use for a number of clamps by one air sensor because of better pressure holding when air is shut off.
  (Maximum number of clamps to be detected by one sensor is 10.)
- Allows to choose less air-consumed, i.e. small orifice diameter type, air sensor.
- Can create large differential-pressure when opening and closing the PAL sensor so that sensor primary pressure can be set as low as possible and reduce the consumption of air.

New PAL sensor

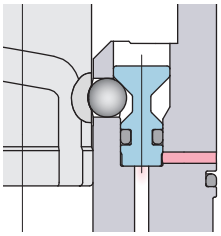

Poppet structure ensures superior sealing performance and can create large differential-pressure when the valve is opening and closing, and air leakage can be minimized.

Previous sensor valve

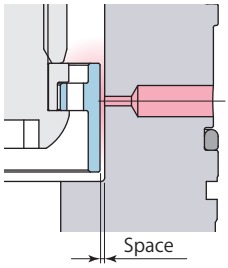

Air leaks easily due to a large space.

CTM□-□T	Swing clamp Short stroke 3 point sensor model	7MPa	Double acting

Dimensions

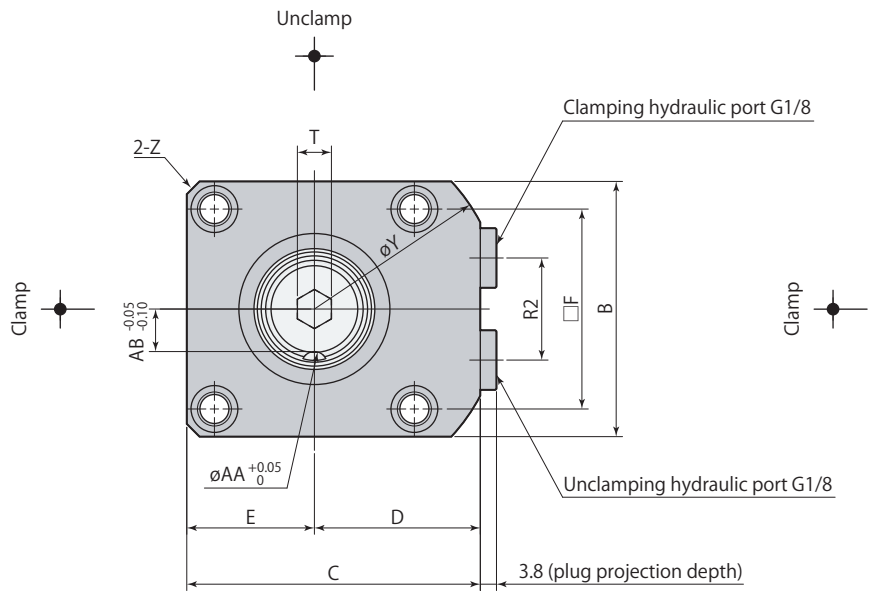

This diagram indicates the arm positioning pin groove at unclamped condition.

Swing direction L (counter-clockwise)

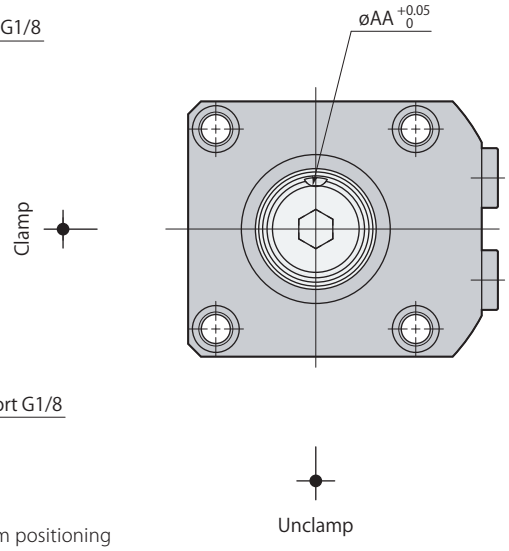

Swing direction R (clockwise)

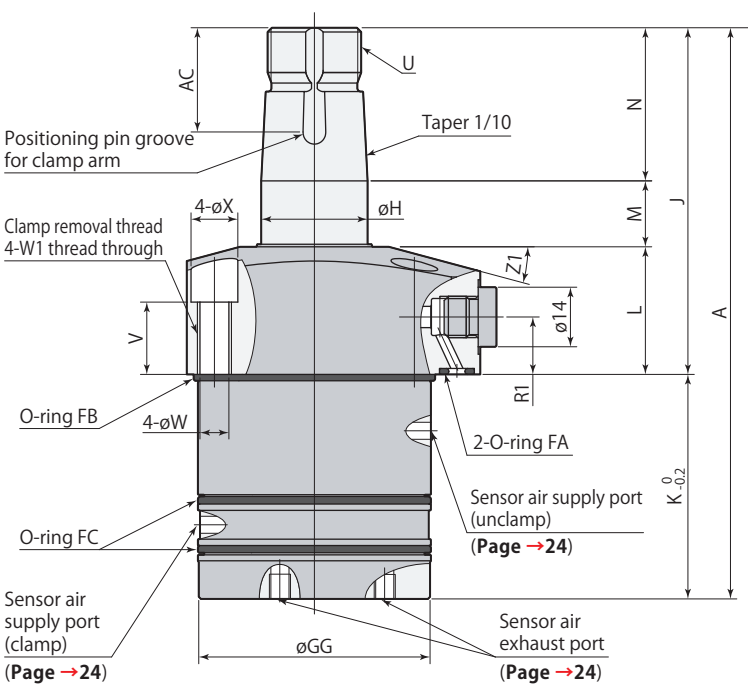

Unclamp

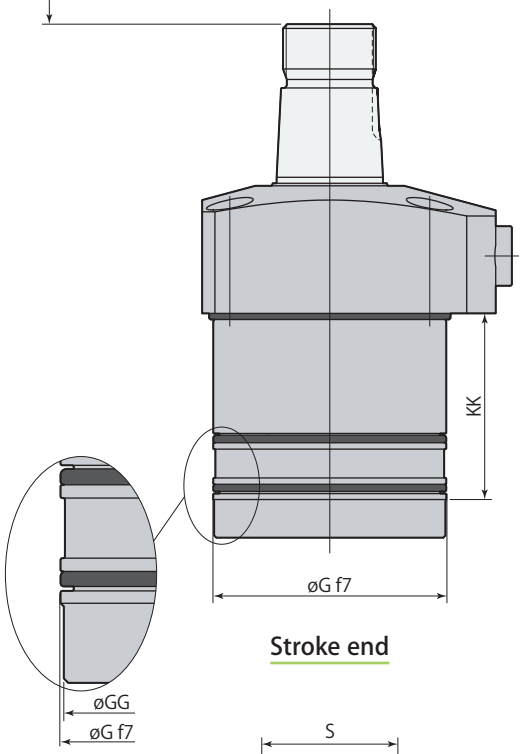

Stroke end

Hex nut for arm mount

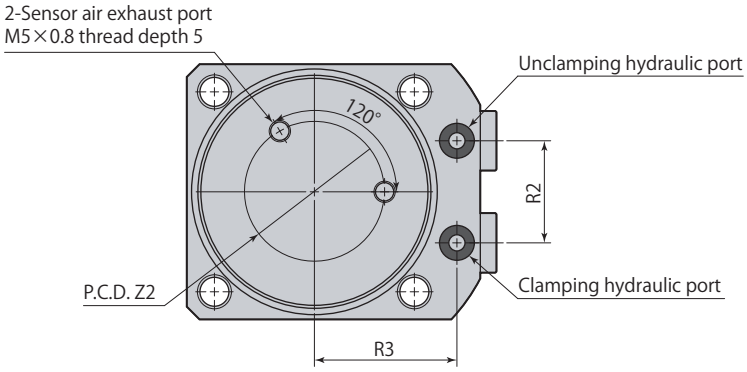

- Hex nut for arm mount is included.
- Refer to **page →72** for the details of perfect nut.
- Clamp arm, positioning pin and mounting screws are not included.

mm

Model		CTM04-□T	CTM05-□T	CTM06-□T	CTM10-□T
Cylinder capacity (cm³)	Clamp	6.0	9.0	14.4	20.7
	Unclamp	9.1	14.0	21.3	31.7
A		113.5	120.5	134.5	146
B		45	51	60	70
C		54	61	69	81
D		31.5	35.5	39	46
E		22.5	25.5	30	35
F		34	40	47	55
øG		$40^{-0.025}_{-0.050}$	$48^{-0.025}_{-0.050}$	$55^{-0.030}_{-0.060}$	$65^{-0.030}_{-0.060}$
øGG		39.7	47.6	54.6	64.6
øH		18	22	25	30
J		65.5	74.5	81.5	88
K		48	46	53	58
KK		41.5	37.5	44	46.5
L		25	28	30	31
M		13.5	14.5	15.5	17
N		27	32	36	40
P		8	9	10	11
R1		12.5	14	13.5	14
R2		18	22	24	30
R3		26	30	33.5	39.5
S (nut width across flats)		24	30	32	41
T (hex socket)		6	8	8	10
U		M16×1.5	M20×1.5	M22×1.5	M27×1.5
V		15	17.5	17	17
øW		5.5	5.5	6.8	6.8
W1		M6×1	M6×1	M8×1.25	M8×1.25
øX		9	9	11	11
øY		73	83	88	106
Z		C3	C3	C3	C4
Z1		12°	15°	15°	15°
Z2		22	27	33	38
øAA (pin groove diameter)		4	5	6	6
AB		7	9	10	12.5
AC		18.5	21.5	24.5	27.5
Positioning pin (dowel pin)		ø4(h8)×10	ø5(h8)×12	ø6(h8)×14	ø6(h8)×16
O-ring FA (fluorocarbon hardness Hs90)		P5	P5	P5	P7
O-ring FB (fluorocarbon hardness Hs70)		38×1.5 (inner diameter×thickness)	AS568-031	AS568-034	AS568-037
O-ring FC (fluorocarbon hardness Hs70)		AS568-028	AS568-031	AS568-033	AS568-036
Taper sleeve		CTH04-MS	CTH05-MS	CTH06-MS	CTH10-MS
Flow control valve*	Meter-in	VCF01S	VCF01S	VCF01S	VCF01
	Meter-out	VCF01S-O	VCF01S-O	VCF01S-O	VCF01-O
Air bleeding valve		VCE01	VCE01	VCE01	VCE01

*: Select the right model of VCF according to the size of the clamp.

Refer to each page for the details of options.

● Taper sleeve **page →70** ● Flow control valve **page →94** ● Air bleeding valve **page →96**

Mounting details

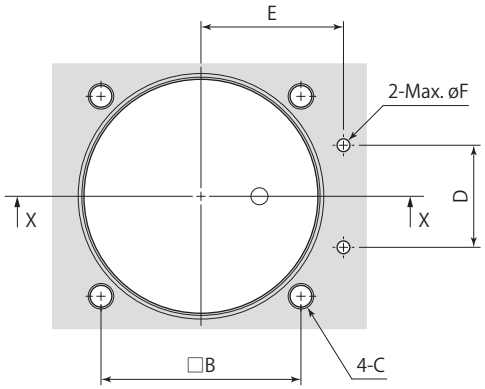

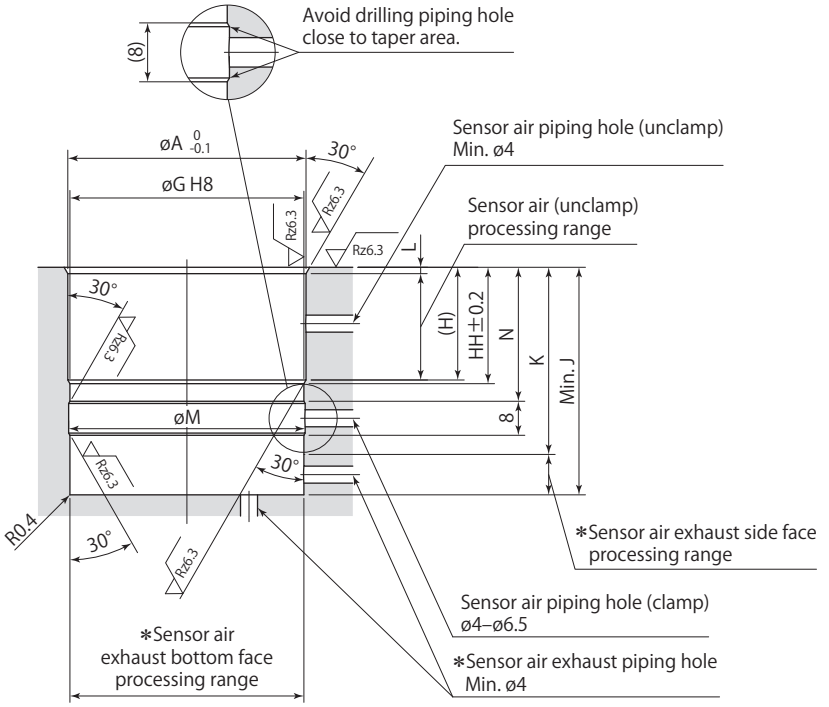

In blind hole X-X

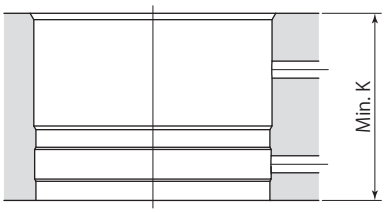

In through hole X-X

∗: Sensor air exhaust piping hole must be made on either side or bottom face.

Rz: ISO4287(1997)

- Apply an appropriate amount of grease to the chamfer and the bore when mounting. Excessive grease may be a blockage in the air passage, causing malfunction of the sensor.
- The 30° taper machining must be provided to avoid the damage of the O-ring. Ensure that there are no interference on taper area when drilling the hole for sensor air.
- The sensor air piping hole can be used for a pilot hole of Rc 1/16 plug.

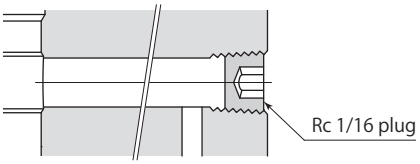

Mounting details

mm

Model	CTM04-□T	CTM05-□T	CTM06-□T	CTM10-□T
øA	40.8	49	56	66
B	34	40	47	55
C	M5	M5	M6	M6
D	18	22	24	30
E	26	30	33.5	39.5
øF	3	3	3	5
øG	$40^{+0.039}_{0}$	$48^{+0.039}_{0}$	$55^{+0.046}_{0}$	$65^{+0.046}_{0}$
H	24.5	20	26.5	29
HH	25.2	20.9	27.4	29.9
J	48.5	46.5	53.5	58.5
K	41.5	37.5	44	46.5
L	1.2	1.5	1.5	1.5
øM	40.6	48.6	55.6	65.6
N	29	25	31.5	34

Caution for piping

Refer to the diagram shown below for the sensor air exhaust port.

Mounting in blind hole
(Sensor air exhaust：side face)

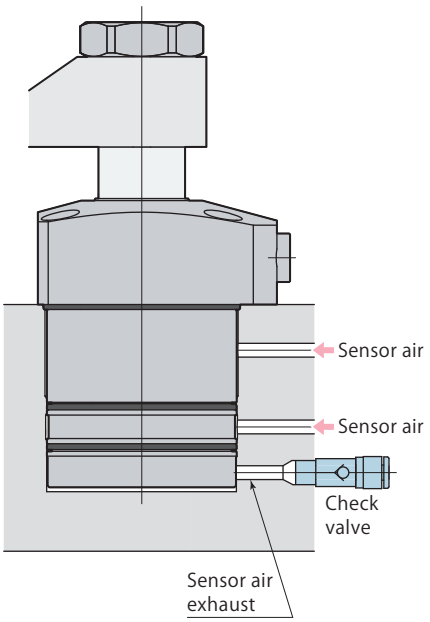

Mounting in blind hole
(Sensor air exhaust：bottom face)

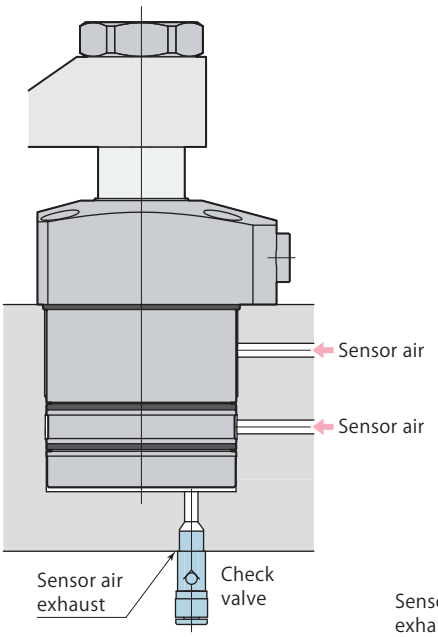

Mounting in through hole

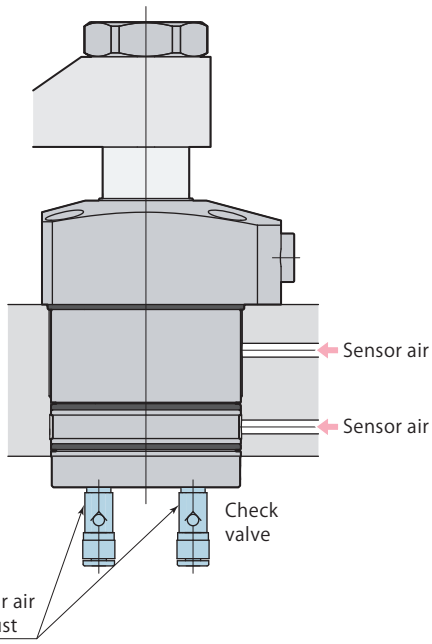

● Use a check valve with cracking pressure of 0.005 MPa or less if there is a risk of metal chips or coolant intrusion. Recommended check valve：AKH or AKB series manufactured by SMC.

Dimensions

CTM□-□S10T

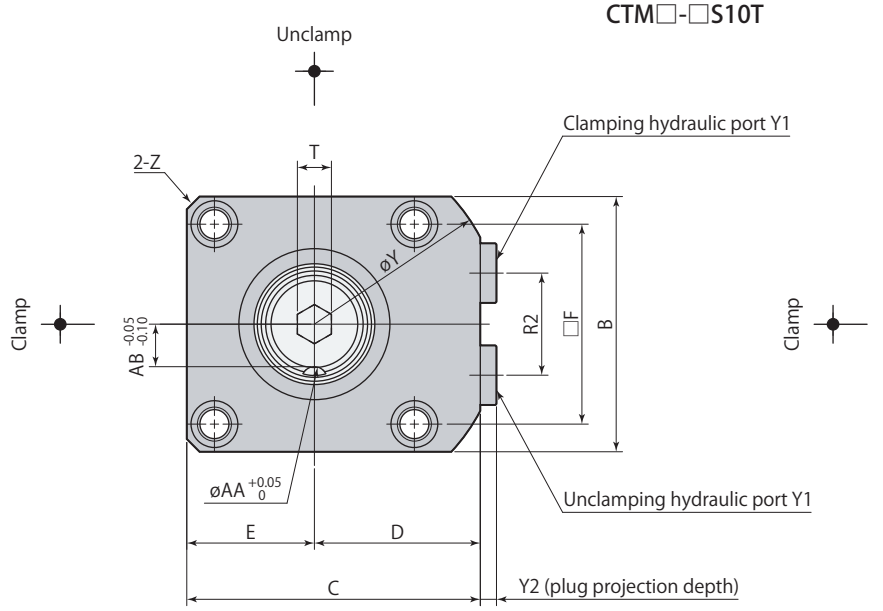

This diagram indicates the arm positioning pin groove at unclamped condition.

Swing direction L (counter-clockwise)

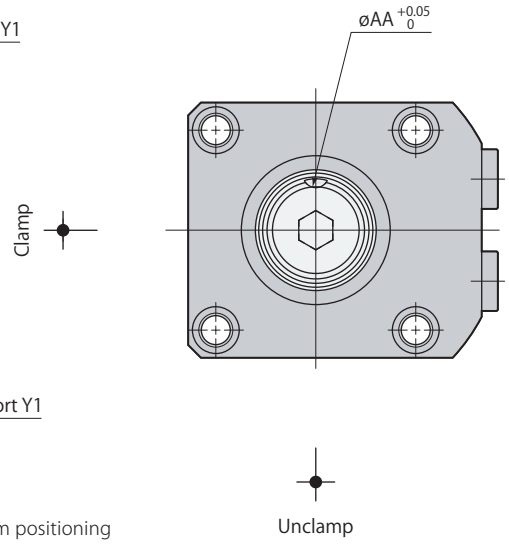

Swing direction R (clockwise)

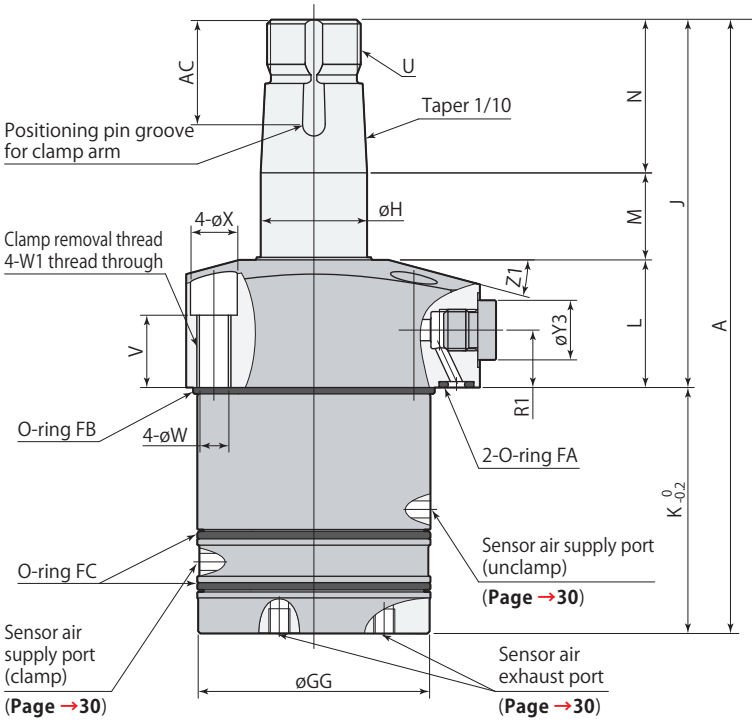

Unclamp

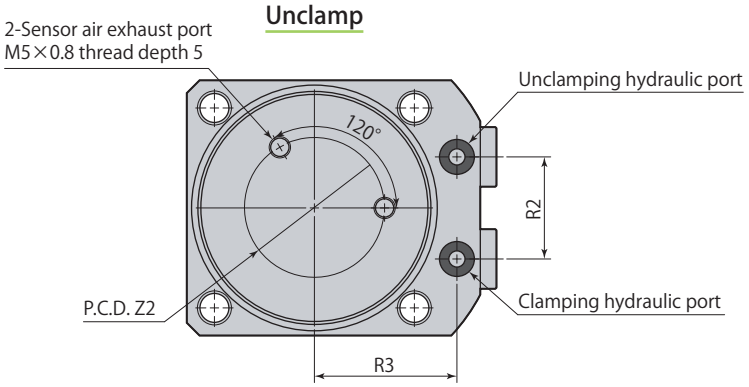

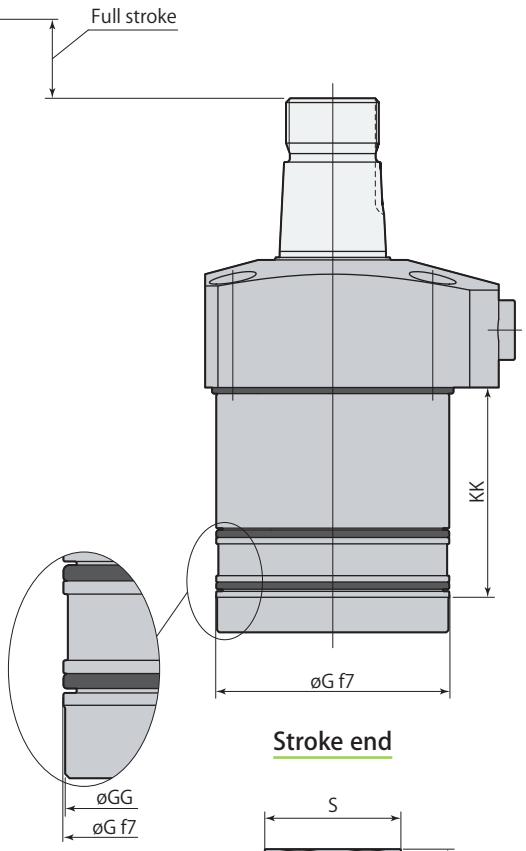

Stroke end

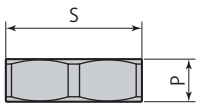

Hex nut for arm mount

- Hex nut for arm mount is included.
- Refer to **page →72** for the details of perfect nut.
- Clamp arm, positioning pin and mounting screws are not included.

mm

Model		CTM04-□S10T	CTM05-□S10T	CTM06-□S10T	CTM10-□S10T	CTM16-□S10T
Cylinder capacity (cm³)	Clamp	8.5	12.5	19.6	27.4	45.7
	Unclamp	12.8	19.4	28.9	41.9	67.9
A		123.5	130.5	144.5	156	177
B		45	51	60	70	80
C		54	61	69	81	92
D		31.5	35.5	39	46	52
E		22.5	25.5	30	35	40
F		34	40	47	55	63
øG		$40^{-0.025}_{-0.050}$	$48^{-0.025}_{-0.050}$	$55^{-0.030}_{-0.060}$	$65^{-0.030}_{-0.060}$	$75^{-0.030}_{-0.060}$
øGG		39.7	47.6	54.6	64.6	74.6
øH		18	22	25	30	35.5
J		70.5	79.5	86.5	93	108
K		53	51	58	63	69
KK		46.5	42.5	49	51.5	56.5
L		25	28	30	31	38
M		18.5	19.5	20.5	22	24
N		27	32	36	40	46
P		8	9	10	11	11
R1		12.5	14	13.5	14	16
R2		18	22	24	30	32
R3		26	30	33.5	39.5	45
S (nut width across flats)		24	30	32	41	46
T (hex socket)		6	8	8	10	10
U		M16×1.5	M20×1.5	M22×1.5	M27×1.5	M30×1.5
V		15	17.5	17	17	21
øW		5.5	5.5	6.8	6.8	9
W1		M6×1	M6×1	M8×1.25	M8×1.25	M10×1.5
øX		9	9	11	11	14
øY		73	83	88	106	116
Y1		G1/8	G1/8	G1/8	G1/8	G1/4
Y2		3.8	3.8	3.8	3.8	4.8
øY3		14	14	14	14	19
Z		C3	C3	C3	C4	C5
Z1		12°	15°	15°	15°	15°
Z2		22	27	33	38	45
øAA (pin groove diameter)		4	5	6	6	8
AB		7	9	10	12.5	14
AC		18.5	21.5	24.5	27.5	28.5
Positioning pin (dowel pin)		ø4(h8)×10	ø5(h8)×12	ø6(h8)×14	ø6(h8)×16	ø8(h8)×16
O-ring FA (fluorocarbon hardness Hs90)		P5	P5	P5	P7	P7
O-ring FB (fluorocarbon hardness Hs70)		38×1.5 (inner diameter×thickness)	AS568-031	AS568-034	AS568-037	AS568-040
O-ring FC (fluorocarbon hardness Hs70)		AS568-028	AS568-031	AS568-033	AS568-036	AS568-039
Taper sleeve		CTH04-MS	CTH05-MS	CTH06-MS	CTH10-MS	CTH16-MS
Flow control valve*	Meter-in	VCF01S	VCF01S	VCF01S	VCF01	VCF02
	Meter-out	VCF01S-O	VCF01S-O	VCF01S-O	VCF01-O	VCF02-O
Air bleeding valve		VCE01	VCE01	VCE01	VCE01	VCE02

*: Select the right model of VCF and VCE according to the size of the clamp.

Refer to each page for the details of options.

● Taper sleeve **page →70** ● Flow control valve **page →94** ● Air bleeding valve **page →96**

Dimensions

CTM□-□S20T

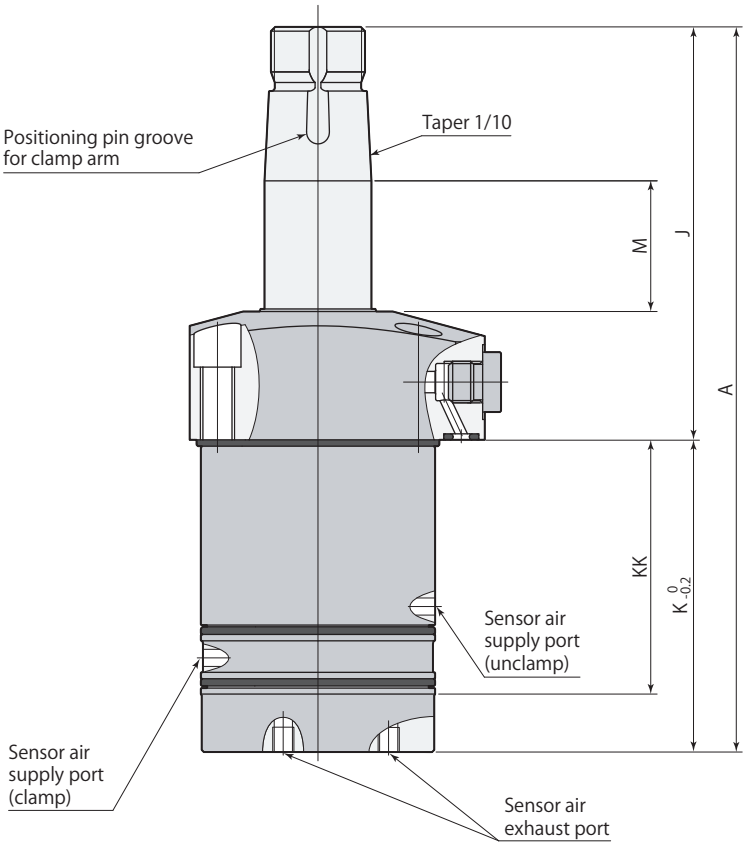

Unclamp

mm

Model		CTM04-□S20T	CTM05-□S20T	CTM06-□S20T	CTM10-□S20T	CTM16-□S20T
Cylinder capacity (cm³)	Clamp	13.5	19.5	29.9	40.7	66.0
	Unclamp	20.4	30.1	44.1	62.3	98.1
A		148.5	155.5	169.5	181	205
J		80.5	89.5	96.5	103	118
K		68	66	73	78	87
KK		56.5	52.5	59	61.5	66.5
M		28.5	29.5	30.5	32	34

● Refer to **pages →26**, **27** for other dimensions that are not shown in the diagram.

Refer to each page for the details of options.

● Taper sleeve **page →70** ● Flow control valve **page →94** ● Air bleeding valve **page →96**

● This product is made to order.

Dimensions

CTM□-□S30T

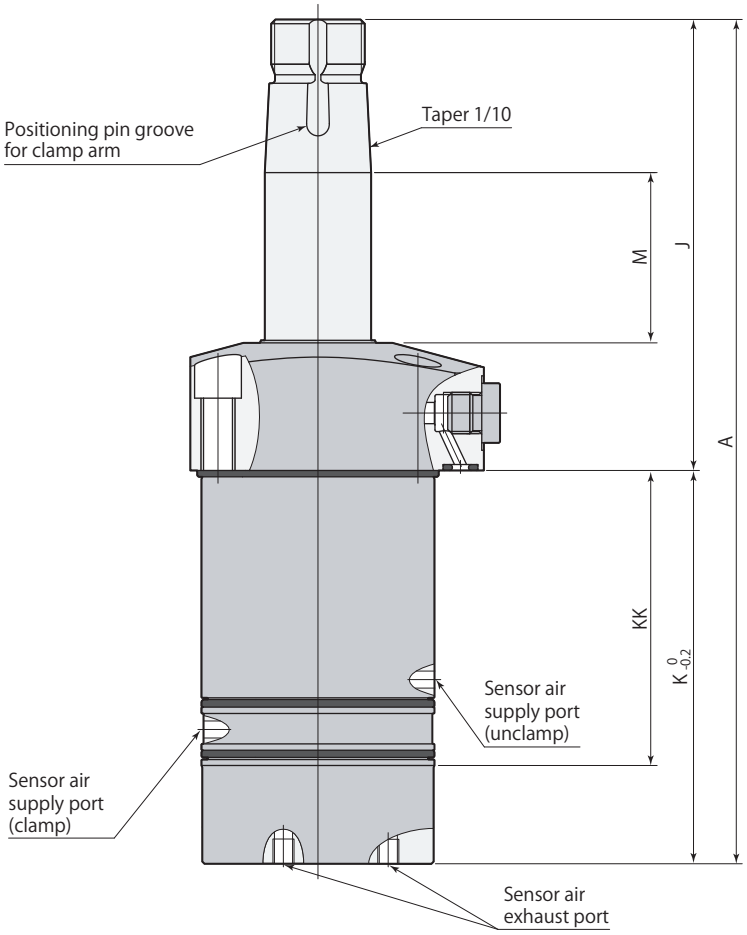

Unclamp

mm

Model		CTM06-□S30T	CTM10-□S30T	CTM16-□S30T
Cylinder capacity (cm³)	Clamp	40.2	54.1	86.2
	Unclamp	59.3	82.7	128.3
A		199.5	211	235
J		106.5	113	128
K		93	98	107
KK		69	71.5	76.5
M		40.5	42	44

● Refer to **pages →26**, **27** for other dimensions that are not shown in the diagram.

Refer to each page for the details of options.

● Taper sleeve **page →70** ● Flow control valve **page →94** ● Air bleeding valve **page →96**

● This product is made to order.

Mounting details

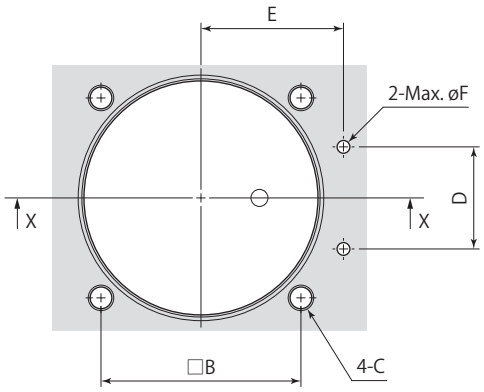

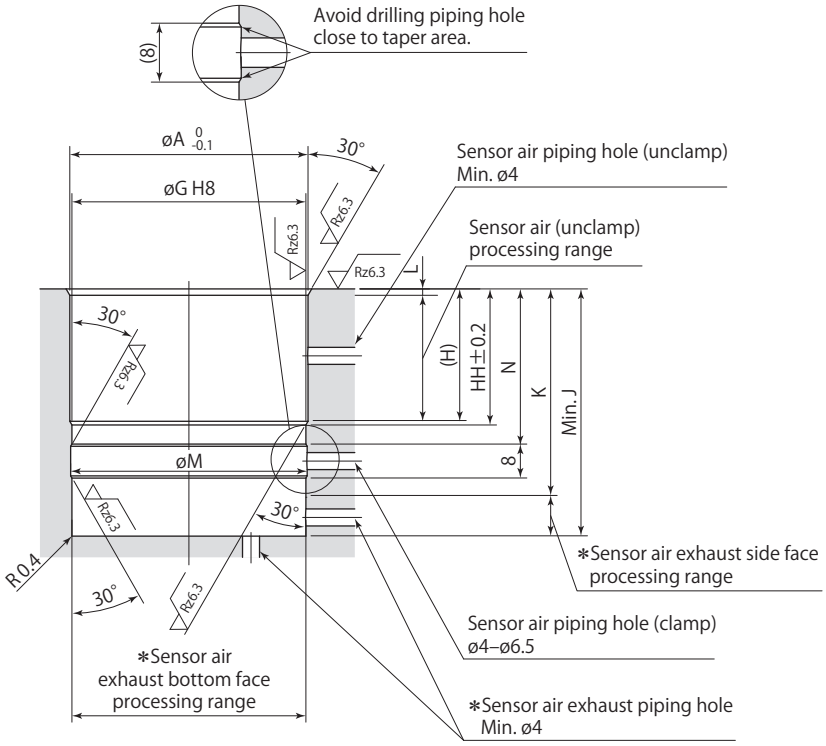

In blind hole X-X

∗: Sensor air exhaust piping hole must be made on either side or bottom face.

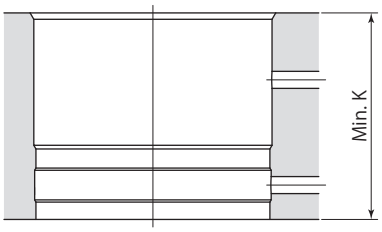

In through hole X-X

Rz: ISO4287(1997)

- Apply an appropriate amount of grease to the chamfer and the bore when mounting. Excessive grease may be a blockage in the air passage, causing malfunction of the sensor.
- The 30° taper machining must be provided to avoid the damage of the O-ring. Ensure that there are no interference on taper area when drilling the hole for sensor air.
- The sensor air piping hole can be used for a pilot hole of Rc 1/16 plug.

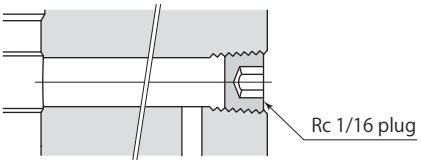

- Refer to **page →25** for caution for piping.

Mounting details

mm

Model	CTM04-□S10T	CTM05-□S10T	CTM06-□S10T	CTM10-□S10T	CTM16-□S10T
øA	40.8	49	56	66	76
B	34	40	47	55	63
C	M5	M5	M6	M6	M8
D	18	22	24	30	32
E	26	30	33.5	39.5	45
øF	3	3	3	5	5
øG	$40^{+0.039}_{0}$	$48^{+0.039}_{0}$	$55^{+0.046}_{0}$	$65^{+0.046}_{0}$	$75^{+0.046}_{0}$
H	29.5	25	31.5	34	39
HH	30.2	25.9	32.4	34.9	39.9
J	53.5	51.5	58.5	63.5	69.5
K	46.5	42.5	49	51.5	56.5
L	1.2	1.5	1.5	1.5	1.5
øM	40.6	48.6	55.6	65.6	75.6
N	34	30	36.5	39	44

mm

Model	CTM04-□S20T	CTM05-□S20T	CTM06-□S20T	CTM10-□S20T	CTM16-□S20T
H	39.5	35	41.5	44	49
HH	40.2	35.9	42.4	44.9	49.9
J	68.5	66.5	73.5	78.5	87.5
K	56.5	52.5	59	61.5	66.5
N	44	40	46.5	49	54

mm

Model	CTM06-□S30T	CTM10-□S30T	CTM16-□S30T
H	51.5	54	59
HH	52.4	54.9	59.9
J	93.5	98.5	107.5
K	69	71.5	76.5
N	56.5	59	64

Clamp PAL sensor function and structure

In the middle of swing stroke

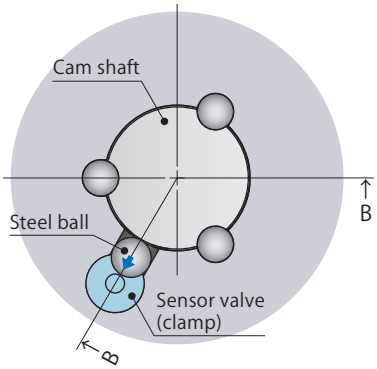

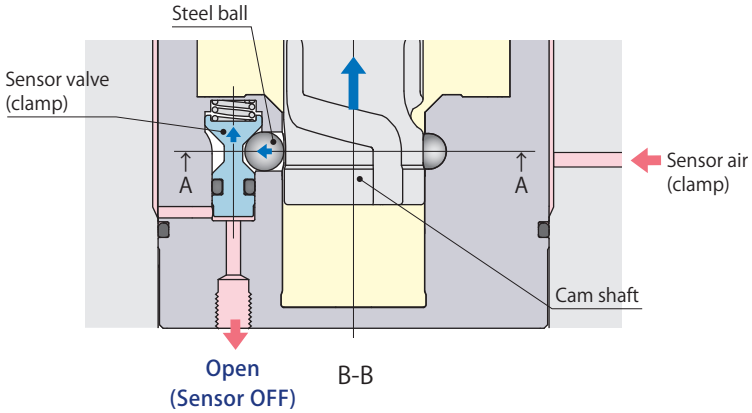

- The sensor valve (clamp) is pushed up by the steel ball to open for air exhaust while piston rod swing strokes.

Clamp detection

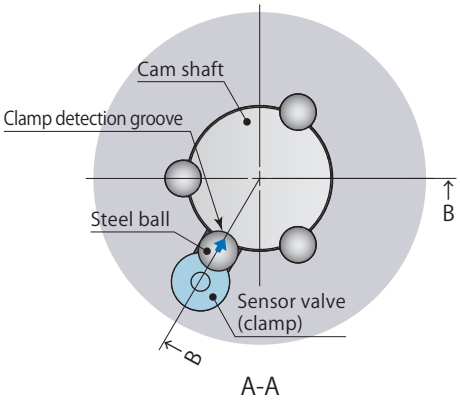

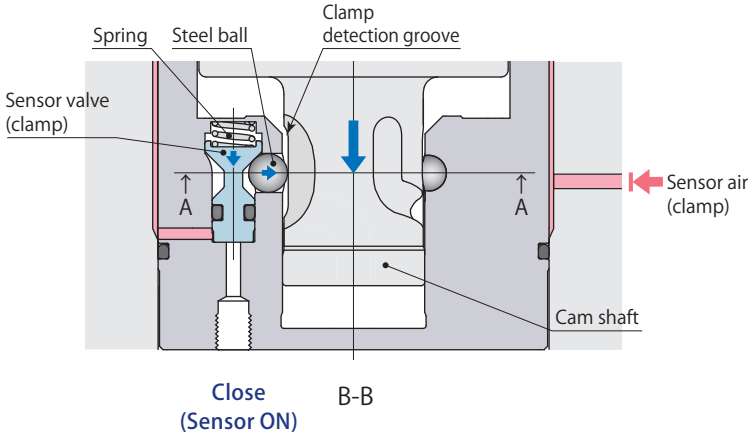

- The steel ball seats in the clamp detection groove when the cam shaft reaches clamping point, and a sensor valve (clamp) is pushed down to shut of the sensor air by a spring, and detects the clamped condition.

Clamp PAL sensor function and structure

Over clamp stroke (Incomplete clamp) detection

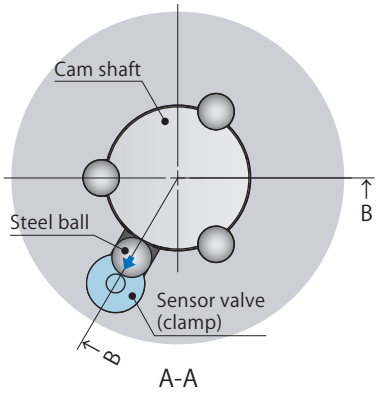

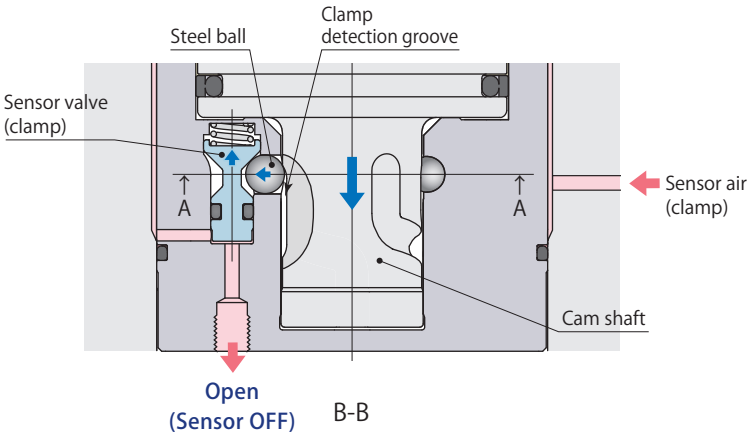

- When the cam shaft passes the clamping point, the sensor valve (clamp) is pushed up by the steel ball to open for air exhaust, and detects the over clamp stroked condition.

Over clamp stroke (Incomplete clamp) detection example

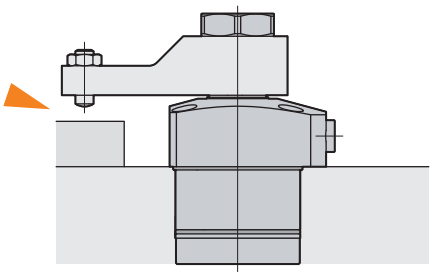

- Clamp disabled due to mis-setting workpiece.

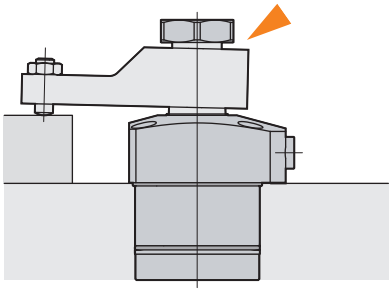

- Clamp disabled due to the damage of piston rod or loose clamp arm.

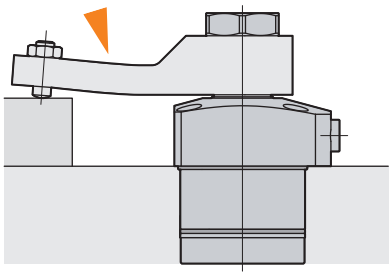

- Clamp disabled due to the deflection of clamp arm.
- Clamp disabled due to the abrasion on the tip of clamp arm during prolonged use.

Clamp, Over clamp stroke detection signal

Unclamp

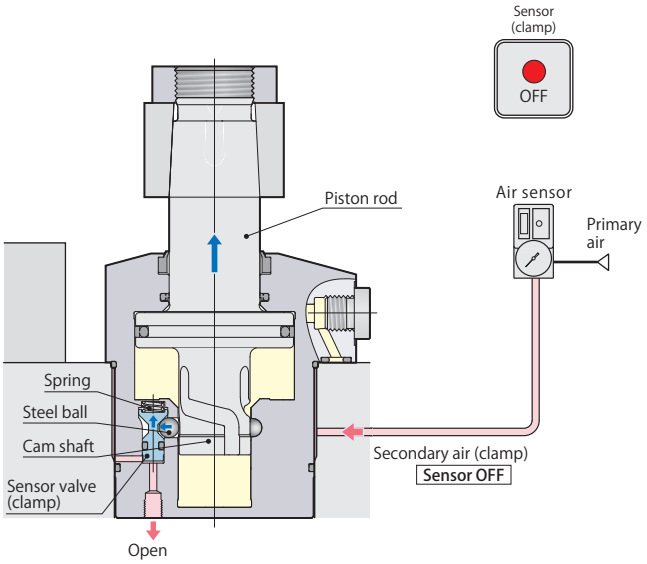

Sensor signal (clamp)	OFF	Unclamp

In the middle of swing stroke

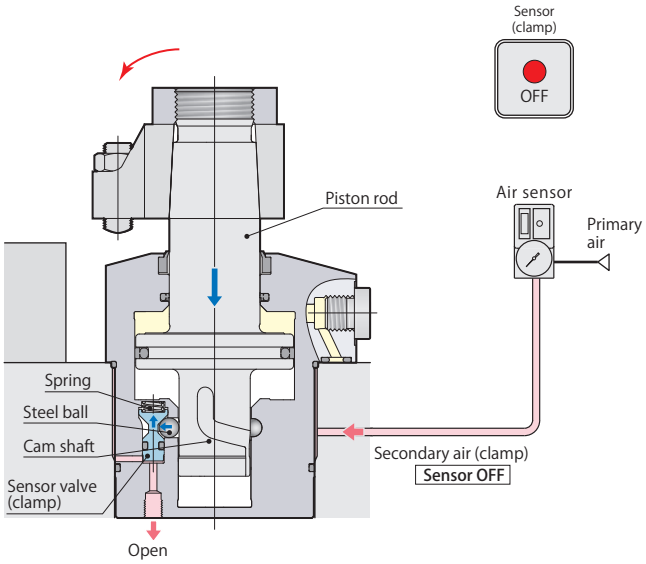

Sensor signal (clamp)	OFF	In the middle of swing stroke

Clamp detection

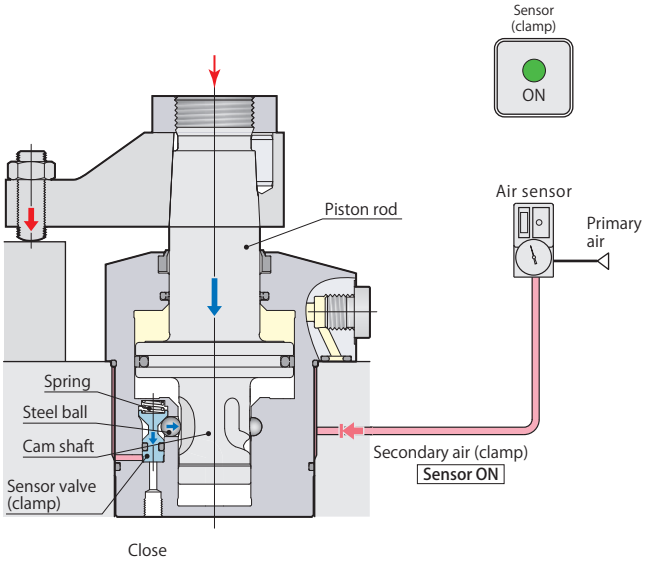

Sensor signal (clamp)	ON	Clamp

Over clamp stroke (Incomplete clamp) detection

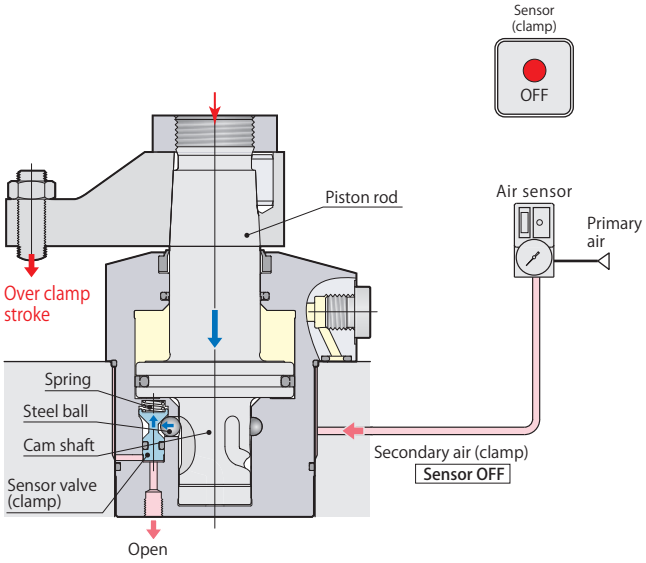

Sensor signal (clamp)	OFF	Over clamp stroke (Incomplete clamp)

Air sensor triggering point

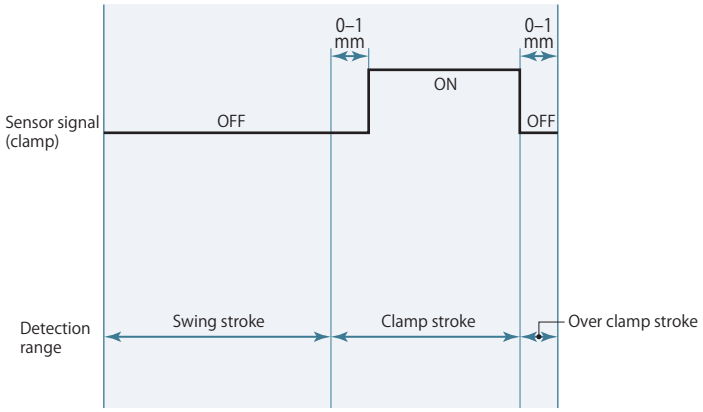

- Refer to the sensor supplier's instruction manual for the details of setting.
- Sensing performance such as detectable time and pressure differs depending on the supplier and model number of the sensor. Select the right model referring to sensor's application and characteristics.

Air sensor unit recommended condition of use

Supplier and model	ISA3-F/G series manufactured by SMC
	GPS2-05, GPS3-E series manufactured by CKD
Air supply pressure	0.1–0.2 MPa
Inner diameter of piping	ø4 mm (ISA3-F：ø2.5 mm)
Overall piping length	5 m or less

- Supply the dry and filtered air. Particulate size 5 μm or less is recommended.
- Use a solenoid valve with needle for air sensor unit and control it supplying air all the time in order to eliminate intrusion of chips or coolant.
- There is a case that air sensing cannot be successfully made as designed when it is used out of the above usage. Contact Technical service center for more details.

Relation between sensor air pressure, PAL sensor and piston stroke

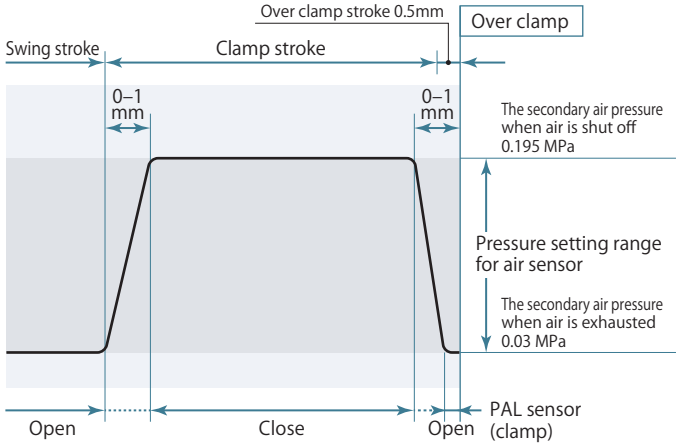

The diagram shown above indicates the relation between the PAL sensor, piston stroke, and secondary air pressure. (The pressure shown in the diagram is a reference based on the 0.2 MPa of primary air pressure for one piece of clamp.)

Since the new PAL sensor works with less air-leakage compared to previous sensor valve,

- Enhances the pressure setting range of the sensor which enables the sensor to set easily. (Ex. Pressure setting range 0.03–0.195 MPa in the diagram)
- Allows the use for a number of clamps by one air sensor because of better pressure holding when air is shut off. (Maximum number of clamps to be detected by one sensor is 10.)
- Allows to choose less air-consumed, i.e. small orifice diameter type, air sensor.
- Can create large differential-pressure when opening and closing the PAL sensor so that sensor primary pressure can be set as low as possible and reduce the consumption of air.

New PAL sensor

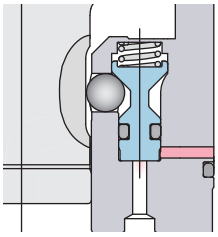

Poppet structure ensures superior sealing performance and can create large differential-pressure when the valve is opening and closing, and air leakage can be minimized.

Previous sensor valve

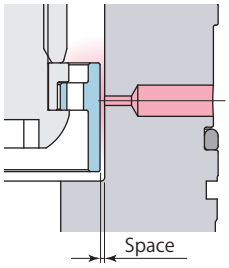

Air leaks easily due to a large space.

CTM□-□C	Swing clamp Short stroke Clamp sensor model	7MPa	Double acting

Dimensions

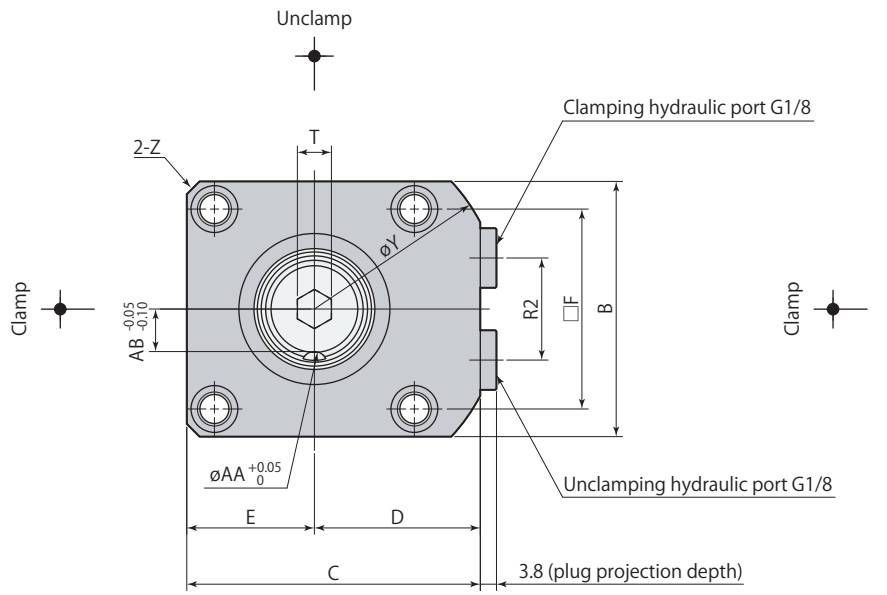

This diagram indicates the arm positioning pin groove at unclamped condition.

Swing direction L (counter-clockwise)

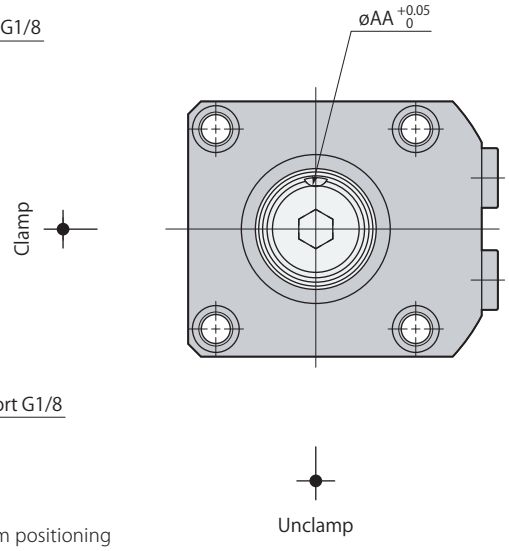

Swing direction R (clockwise)

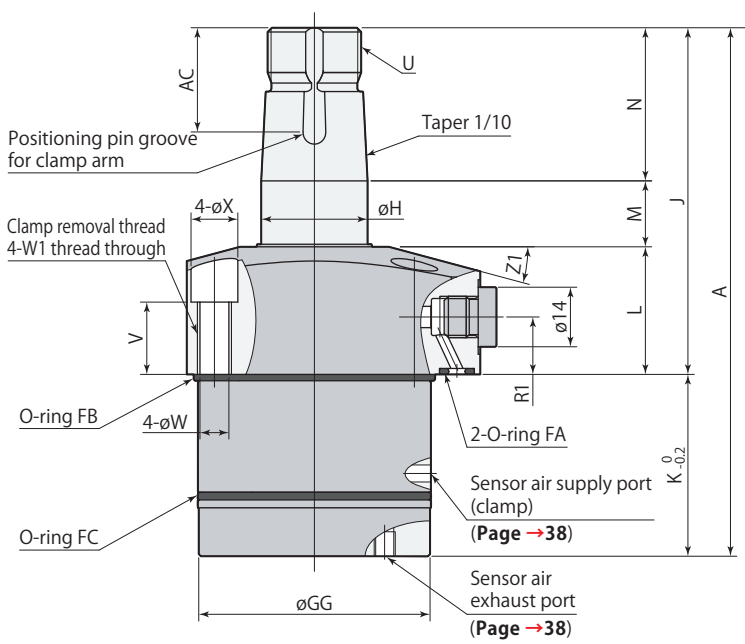

Unclamp

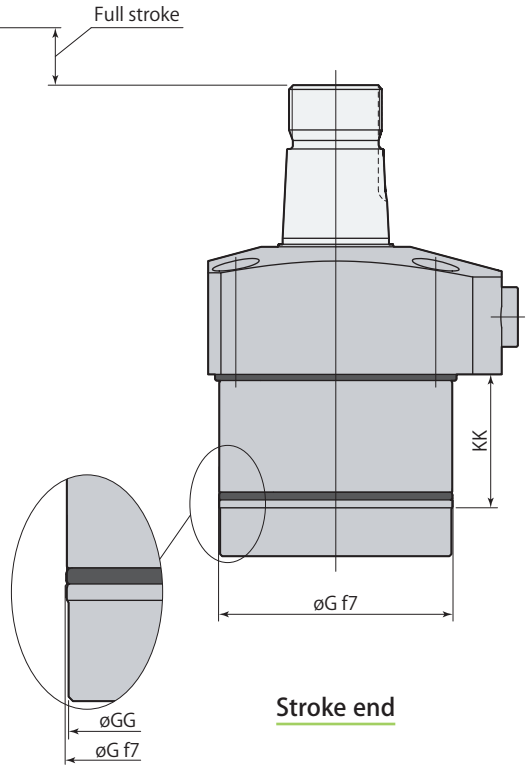

Stroke end

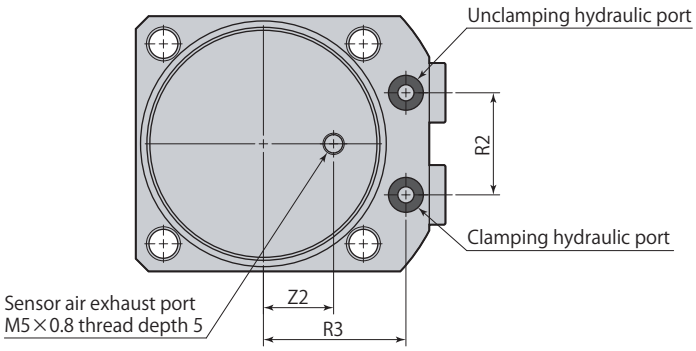

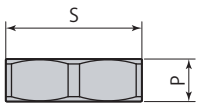

Hex nut for arm mount

- Hex nut for arm mount is included.
- Refer to **page →72** for the details of perfect nut.
- Clamp arm, positioning pin and mounting screws are not included.

mm

Model		CTM04-□C	CTM05-□C	CTM06-□C	CTM10-□C
Cylinder capacity (cm³)	Clamp	6.0	9.0	14.4	20.7
	Unclamp	9.1	14.0	21.3	31.7
A		103.5	110.5	124.5	136
B		45	51	60	70
C		54	61	69	81
D		31.5	35.5	39	46
E		22.5	25.5	30	35
F		34	40	47	55
øG		$40^{-0.025}_{-0.050}$	$48^{-0.025}_{-0.050}$	$55^{-0.030}_{-0.060}$	$65^{-0.030}_{-0.060}$
øGG		39.7	47.6	54.6	64.6
øH		18	22	25	30
J		65.5	74.5	81.5	88
K		38	36	43	48
KK		29.5	25	31.5	34
L		25	28	30	31
M		13.5	14.5	15.5	17
N		27	32	36	40
P		8	9	10	11
R1		12.5	14	13.5	14
R2		18	22	24	30
R3		26	30	33.5	39.5
S (nut width across flats)		24	30	32	41
T (hex socket)		6	8	8	10
U		M16×1.5	M20×1.5	M22×1.5	M27×1.5
V		15	17.5	17	17
øW		5.5	5.5	6.8	6.8
W1		M6×1	M6×1	M8×1.25	M8×1.25
øX		9	9	11	11
øY		73	83	88	106
Z		C3	C3	C3	C4
Z1		12°	15°	15°	15°
Z2		11	13.5	16.5	19
øAA (pin groove diameter)		4	5	6	6
AB		7	9	10	12.5
AC		18.5	21.5	24.5	27.5
Positioning pin (dowel pin)		ø4(h8)×10	ø5(h8)×12	ø6(h8)×14	ø6(h8)×16
O-ring FA (fluorocarbon hardness Hs90)		P5	P5	P5	P7
O-ring FB (fluorocarbon hardness Hs70)		38×1.5 (inner diameter×thickness)	AS568-031	AS568-034	AS568-037
O-ring FC (fluorocarbon hardness Hs70)		AS568-028	AS568-031	AS568-033	AS568-036
Taper sleeve		CTH04-MS	CTH05-MS	CTH06-MS	CTH10-MS
Flow control valve*	Meter-in	VCF01S	VCF01S	VCF01S	VCF01
	Meter-out	VCF01S-O	VCF01S-O	VCF01S-O	VCF01-O
Air bleeding valve		VCE01	VCE01	VCE01	VCE01

*: Select the right model of VCF according to the size of the clamp.

Refer to each page for the details of options.

● Taper sleeve **page →70** ● Flow control valve **page →94** ● Air bleeding valve **page →96**

Mounting details

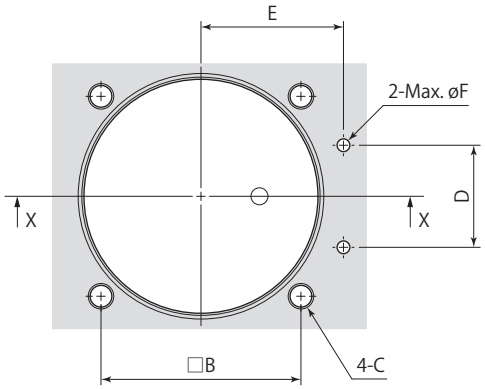

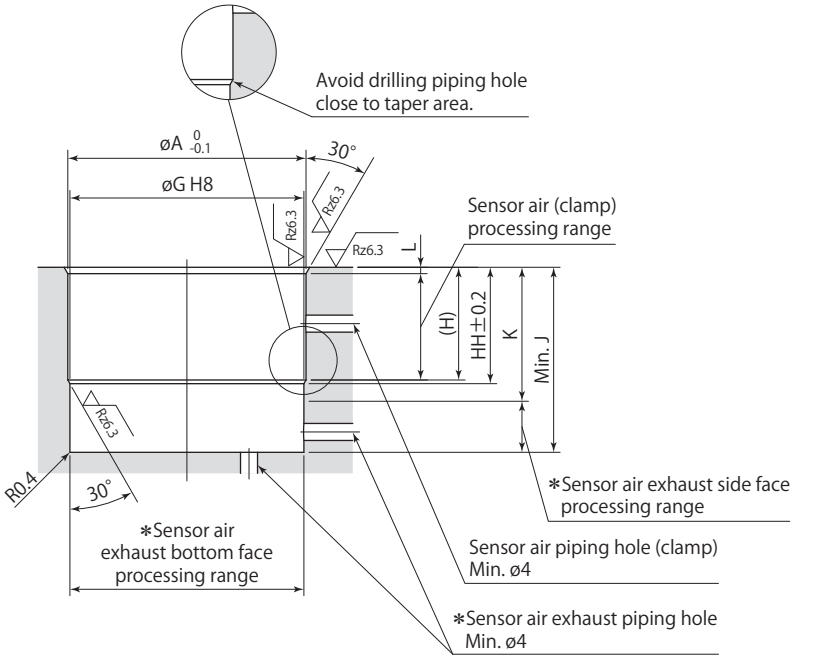

In blind hole X-X

*: Sensor air exhaust piping hole must be made on either side or bottom face.

Rz: ISO4287(1997)

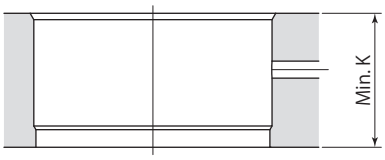

In through hole X-X

- Apply an appropriate amount of grease to the chamfer and the bore when mounting. Excessive grease may be a blockage in the air passage, causing malfunction of the sensor.
- The 30° taper machining must be provided to avoid the damage of the O-ring. Ensure that there are no interference on taper area when drilling the hole for sensor air.

Mounting details

mm

Model	CTM04-□C	CTM05-□C	CTM06-□C	CTM10-□C
øA	40.8	49	56	66
B	34	40	47	55
C	M5	M5	M6	M6
D	18	22	24	30
E	26	30	33.5	39.5
øF	3	3	3	5
øG	$40^{+0.039}_{0}$	$48^{+0.039}_{0}$	$55^{+0.046}_{0}$	$65^{+0.046}_{0}$
H	24.5	20	26.5	29
HH	25.2	20.9	27.4	29.9
J	38.5	36.5	43.5	48.5
K	29.5	25	31.5	34
L	1.2	1.5	1.5	1.5

Caution for piping

Refer to the diagram shown below for the sensor air exhaust port.

Mounting in blind hole
(Sensor air exhaust：side face)

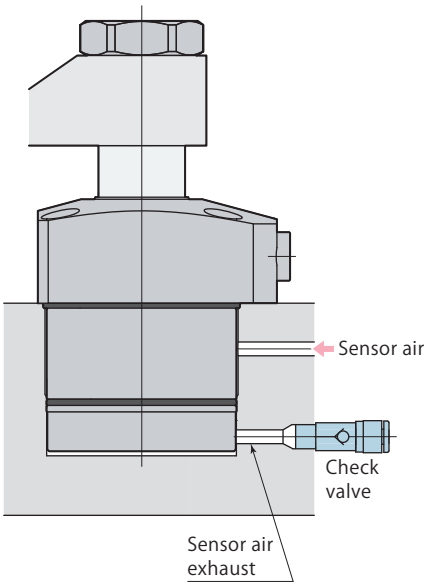

Mounting in blind hole
(Sensor air exhaust：bottom face)

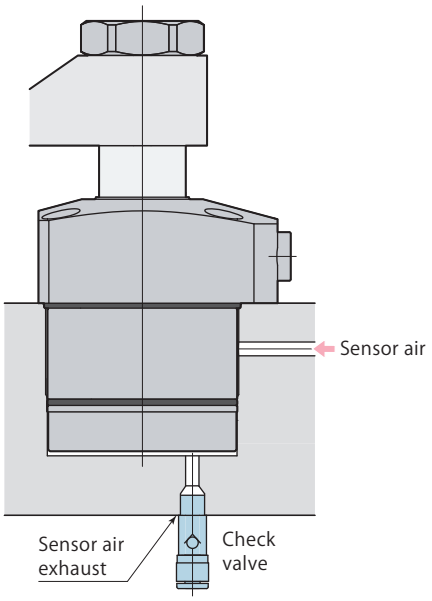

Mounting in through hole

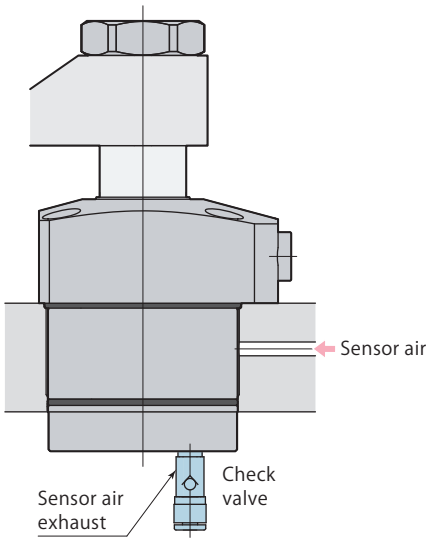

● Use a check valve with cracking pressure of 0.005 MPa or less if there is a risk of metal chips or coolant intrusion. Recommended check valve：AKH or AKB series manufactured by SMC.

CTM□-□S□C	Swing clamp Long stroke Clamp sensor model	7MPa	Double acting

Dimensions

CTM□-□S10C

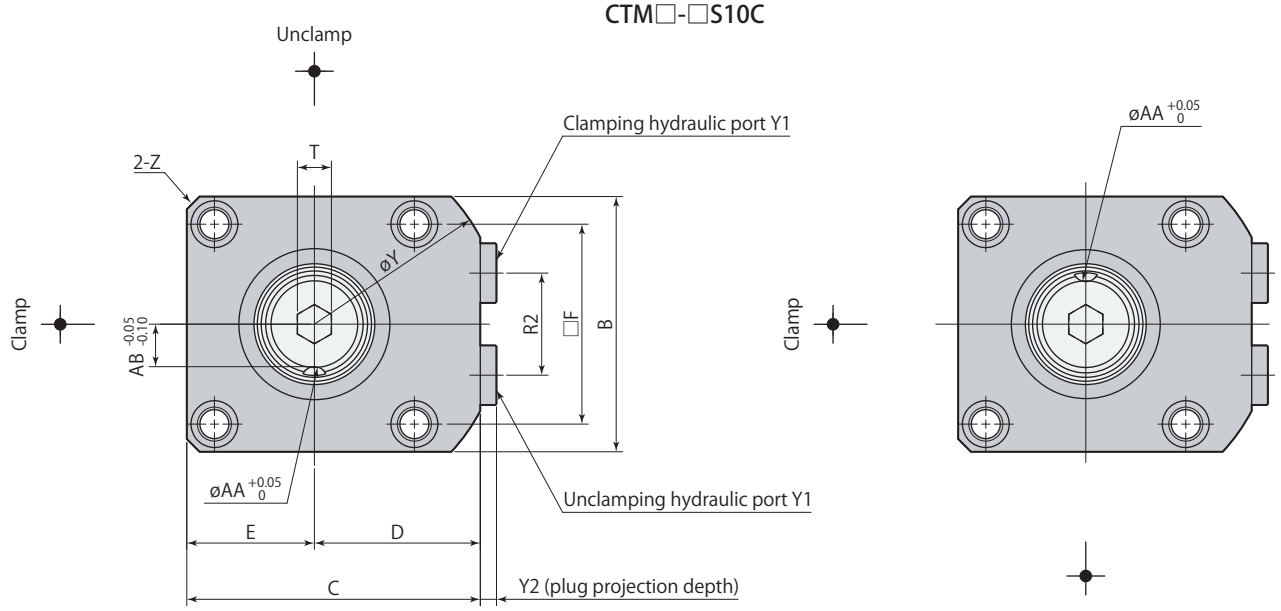

Swing direction L (counter-clockwise)

Swing direction R (clockwise)

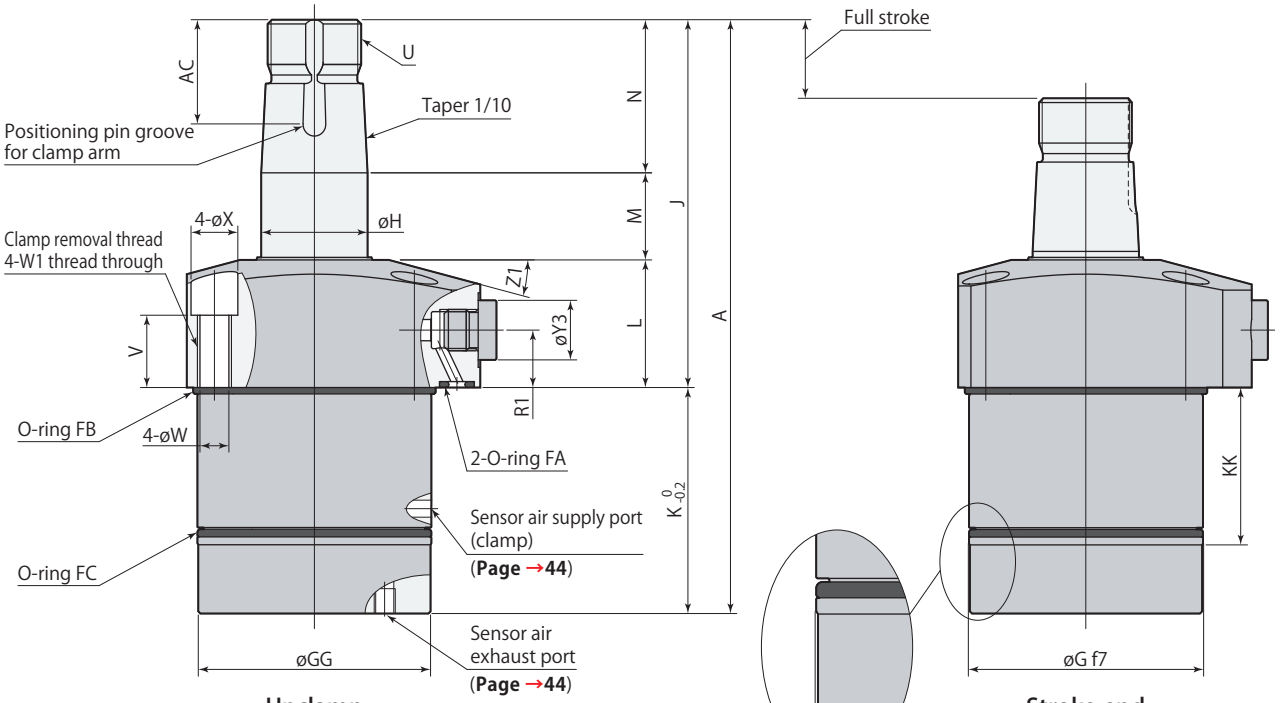

Unclamp

Stroke end

- Hex nut for arm mount is included.
- Refer to **page →72** for the details of perfect nut.
- Clamp arm, positioning pin and mounting screws are not included.

mm

Model		CTM04-□S10C	CTM05-□S10C	CTM06-□S10C	CTM10-□S10C	CTM16-□S10C
Cylinder capacity (cm³)	Clamp	8.5	12.5	19.6	27.4	45.7
	Unclamp	12.8	19.4	28.9	41.9	67.9
A		118.5	125.5	139.5	151	175
B		45	51	60	70	80
C		54	61	69	81	92
D		31.5	35.5	39	46	52
E		22.5	25.5	30	35	40
F		34	40	47	55	63
øG		$40^{-0.025}_{-0.050}$	$48^{-0.025}_{-0.050}$	$55^{-0.030}_{-0.060}$	$65^{-0.030}_{-0.060}$	$75^{-0.030}_{-0.060}$
øGG		39.7	47.6	54.6	64.6	74.6
øH		18	22	25	30	35.5
J		70.5	79.5	86.5	93	108
K		48	46	53	58	67
KK		34.5	30	36.5	39	44
L		25	28	30	31	38
M		18.5	19.5	20.5	22	24
N		27	32	36	40	46
P		8	9	10	11	11
R1		12.5	14	13.5	14	16
R2		18	22	24	30	32
R3		26	30	33.5	39.5	45
S (nut width across flats)		24	30	32	41	46
T (hex socket)		6	8	8	10	10
U		M16×1.5	M20×1.5	M22×1.5	M27×1.5	M30×1.5
V		15	17.5	17	17	21
øW		5.5	5.5	6.8	6.8	9
W1		M6×1	M6×1	M8×1.25	M8×1.25	M10×1.5
øX		9	9	11	11	14
øY		73	83	88	106	116
Y1		G1/8	G1/8	G1/8	G1/8	G1/4
Y2		3.8	3.8	3.8	3.8	4.8
øY3		14	14	14	14	19
Z		C3	C3	C3	C4	C5
Z1		12°	15°	15°	15°	15°
Z2		11	13.5	16.5	19	22.5
øAA (pin groove diameter)		4	5	6	6	8
AB		7	9	10	12.5	14
AC		18.5	21.5	24.5	27.5	28.5
Positioning pin (dowel pin)		ø4(h8)×10	ø5(h8)×12	ø6(h8)×14	ø6(h8)×16	ø8(h8)×16
O-ring FA (fluorocarbon hardness Hs90)		P5	P5	P5	P7	P7
O-ring FB (fluorocarbon hardness Hs70)		38×1.5 (inner diameter×thickness)	AS568-031	AS568-034	AS568-037	AS568-040
O-ring FC (fluorocarbon hardness Hs70)		AS568-028	AS568-031	AS568-033	AS568-036	AS568-039
Taper sleeve		CTH04-MS	CTH05-MS	CTH06-MS	CTH10-MS	CTH16-MS
Flow control valve*	Meter-in	VCF01S	VCF01S	VCF01S	VCF01	VCF02
	Meter-out	VCF01S-O	VCF01S-O	VCF01S-O	VCF01-O	VCF02-O
Air bleeding valve*		VCE01	VCE01	VCE01	VCE01	VCE02

*: Select the right model of VCF and VCE according to the size of the clamp.

Refer to each page for the details of options.

● Taper sleeve **page →70** ● Flow control valve **page →94** ● Air bleeding valve **page →96**

Dimensions

CTM□-□S20C

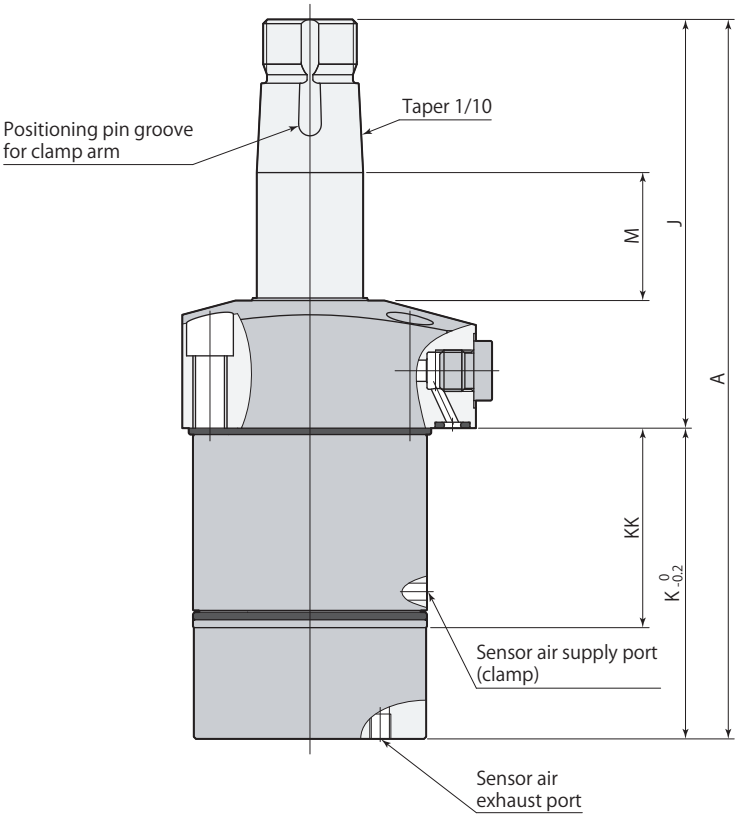

Unclamp

mm

Model		CTM04-□S20C	CTM05-□S20C	CTM06-□S20C	CTM10-□S20C	CTM16-□S20C
Cylinder capacity (cm³)	Clamp	13.5	19.5	29.9	40.7	66.0
	Unclamp	20.4	30.1	44.1	62.3	98.1
A		148.5	155.5	169.5	181	205
J		80.5	89.5	96.5	103	118
K		68	66	73	78	87
KK		44.5	40	46.5	49	54
M		28.5	29.5	30.5	32	34

● Refer to **pages →40**, **41** for other dimensions that are not shown in the diagram.

Refer to each page for the details of options.

● Taper sleeve **page →70** ● Flow control valve **page →94** ● Air bleeding valve **page →96**

● This product is made to order.

Dimensions

CTM□-□S30C

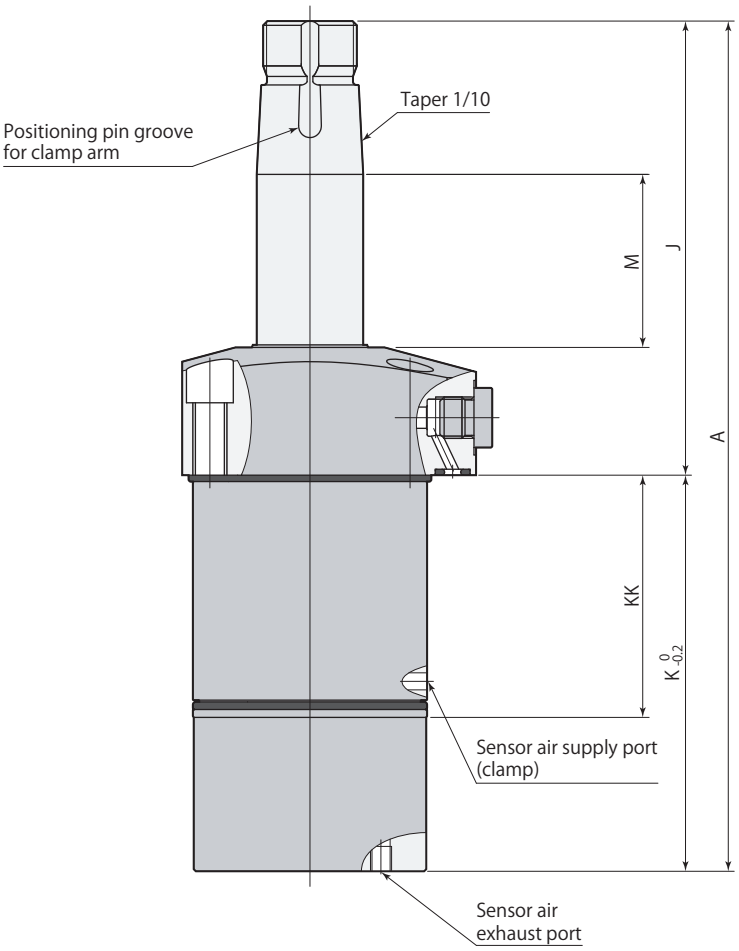

Unclamp

mm

Model		CTM06-□S30C	CTM10-□S30C	CTM16-□S30C
Cylinder capacity (cm³)	Clamp	40.2	54.1	86.2
	Unclamp	59.3	82.7	128.3
A		199.5	211	235
J		106.5	113	128
K		93	98	107
KK		56.5	59	64
M		40.5	42	44

● Refer to **pages →40**, **41** for other dimensions that are not shown in the diagram.

Refer to each page for the details of options.

● Taper sleeve **page →70** ● Flow control valve **page →94** ● Air bleeding valve **page →96**

● This product is made to order.

Mounting details

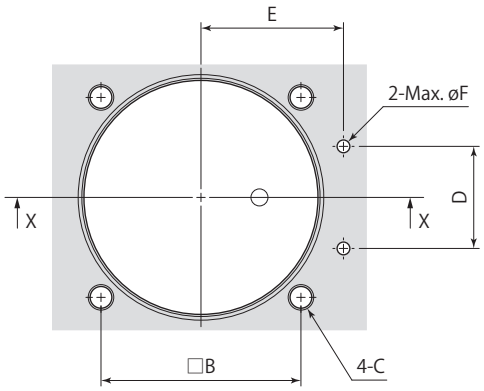

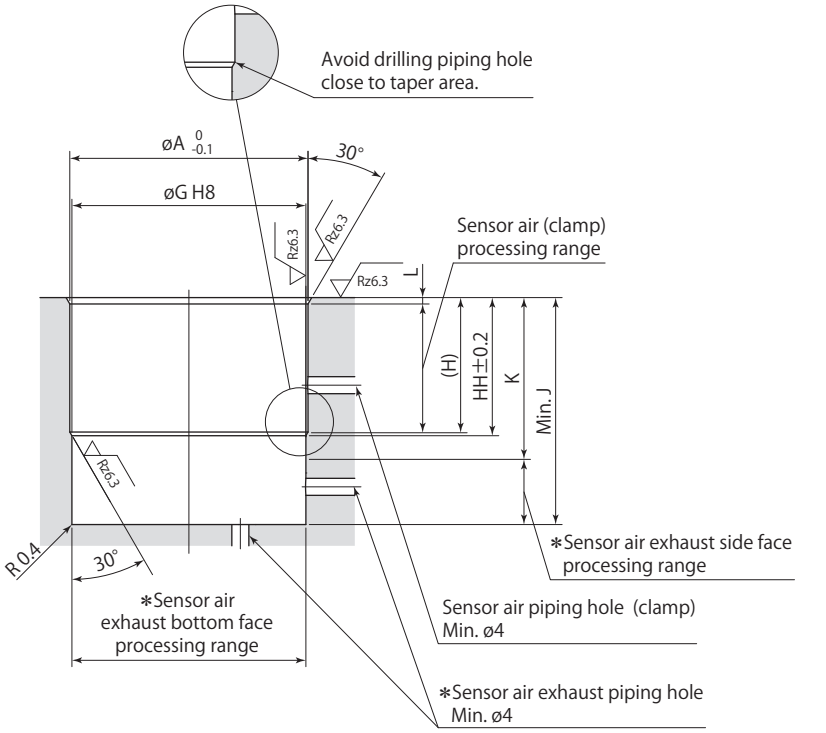

In blind hole X-X

*: Sensor air exhaust piping hole must be made on either side or bottom face.

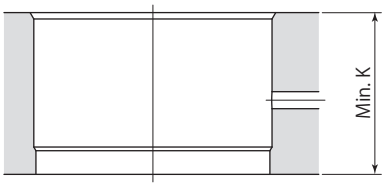

In through hole X-X

Rz: ISO4287(1997)

- Apply an appropriate amount of grease to the chamfer and the bore when mounting. Excessive grease may be a blockage in the air passage, causing malfunction of the sensor.
- The 30° taper machining must be provided to avoid the damage of the O-ring. Ensure that there are no interference on taper area when drilling the hole for sensor air.
- Refer to **page →39** for caution for piping.

Mounting details

mm

Model	CTM04-□S10C	CTM05-□S10C	CTM06-□S10C	CTM10-□S10C	CTM16-□S10C
øA	40.8	49	56	66	76
B	34	40	47	55	63
C	M5	M5	M6	M6	M8
D	18	22	24	30	32
E	26	30	33.5	39.5	45
øF	3	3	3	5	5
øG	$40^{+0.039}_{0}$	$48^{+0.039}_{0}$	$55^{+0.046}_{0}$	$65^{+0.046}_{0}$	$75^{+0.046}_{0}$
H	29.5	25	31.5	34	39
HH	30.2	25.9	32.4	34.9	39.9
J	48.5	46.5	53.5	58.5	67.5
K	34.5	30	36.5	39	44
L	1.2	1.5	1.5	1.5	1.5

mm

Model	CTM04-□S20C	CTM05-□S20C	CTM06-□S20C	CTM10-□S20C	CTM16-□S20C
H	39.5	35	41.5	44	49
HH	40.2	35.9	42.4	44.9	49.9
J	68.5	66.5	73.5	78.5	87.5
K	44.5	40	46.5	49	54

mm

Model	CTM06-□S30C	CTM10-□S30C	CTM16-□S30C
H	51.5	54	59
HH	52.4	54.9	59.9
J	93.5	98.5	107.5
K	56.5	59	64

Unclamp PAL sensor function and structure

Unclamp detection

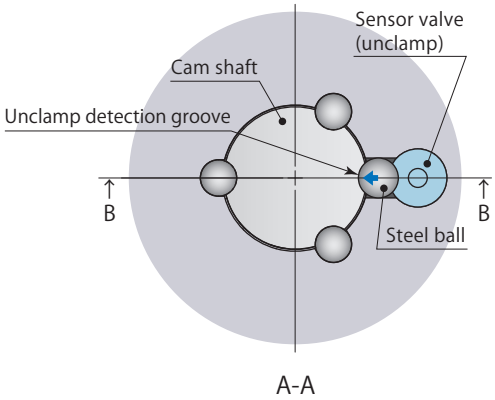

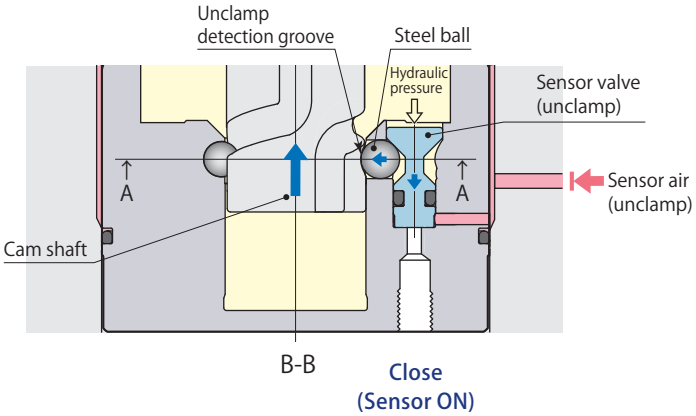

- The steel ball seats in the unclamp detection groove when the cam shaft reaches unclamp end, and a sensor valve (unclamp) is pushed down to shut off the sensor air by hydraulic force, and detects the unclamped condition.

In the middle of stroke

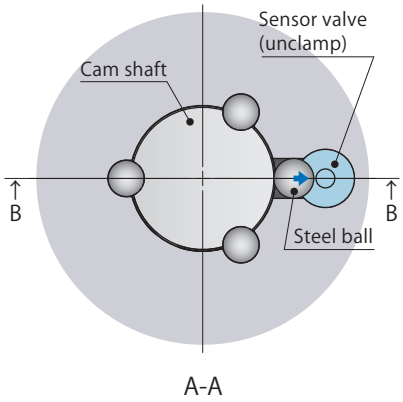

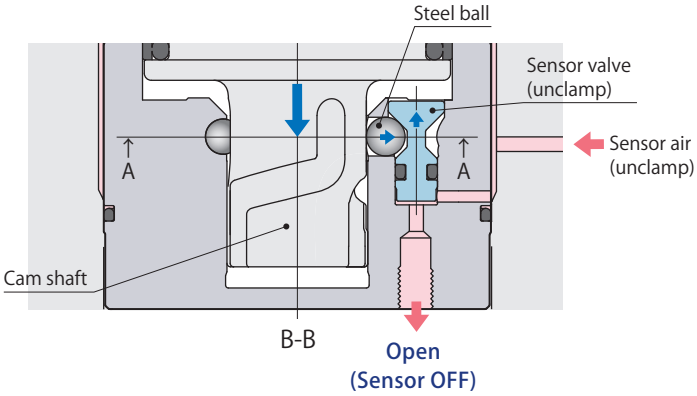

- When the cam shaft lowers, the sensor valve (unclamp) is pushed up by the steel ball to open for air exhaust.

Unclamp detection signal

Unclamp detection

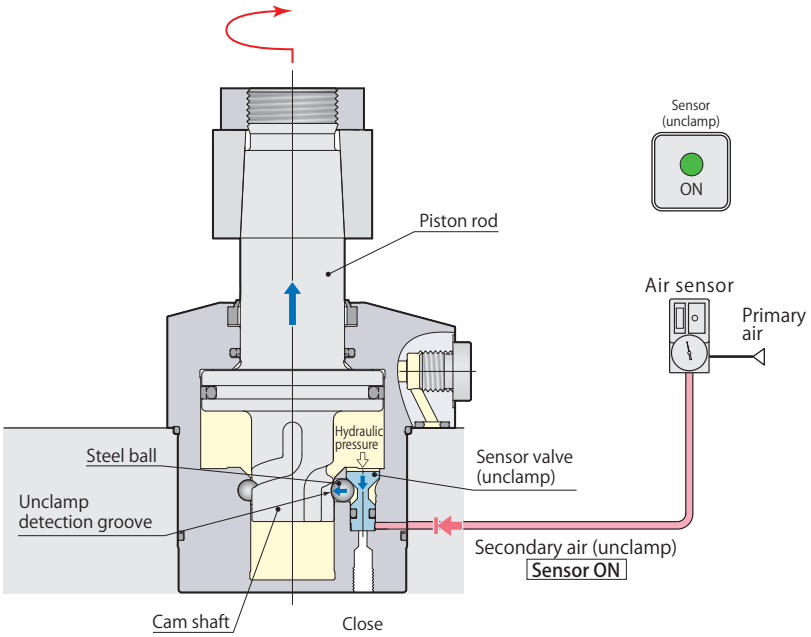

Sensor signal (unclamp)	ON	Unclamp

In the middle of stroke

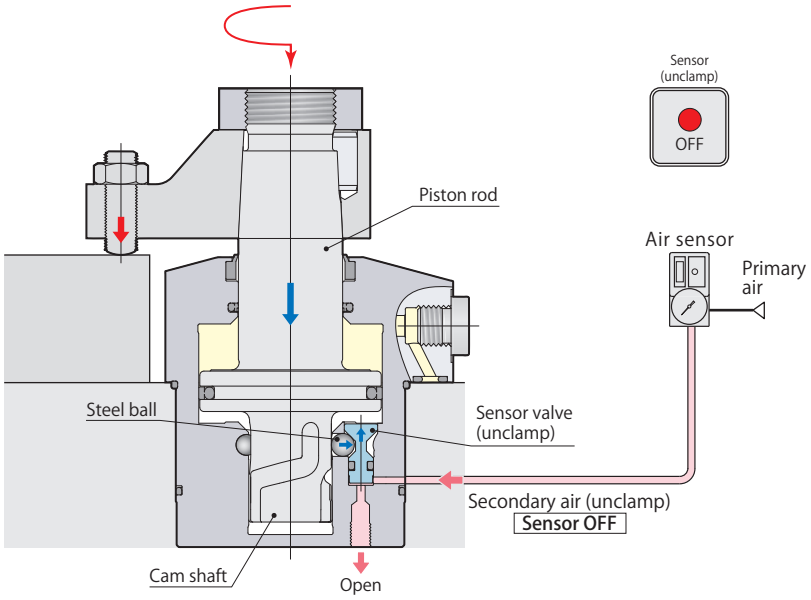

Sensor signal (unclamp)	OFF	Clamp, in the middle of stroke

Air sensor triggering point

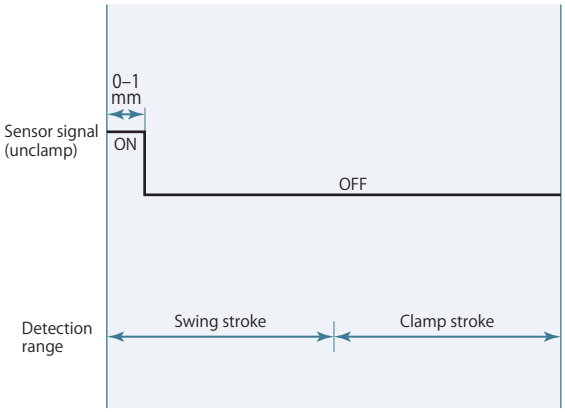

- Refer to the sensor supplier's instruction manual for the details of setting.
- Sensing performance such as detectable time and pressure differs depending on the supplier and model number of the sensor. Select the right model referring to sensor's application and characteristics.

Air sensor unit recommended condition of use

Supplier and model	ISA3-F/G series manufactured by SMC
	GPS2-05, GPS3-E series manufactured by CKD
Air supply pressure	0.1–0.2 MPa
Inner diameter of piping	ø4 mm (ISA3-F：ø2.5 mm)
Overall piping length	5 m or less

- Supply the dry and filtered air. Particulate size 5 μm or less is recommended.
- Use a solenoid valve with needle for air sensor unit and control it supplying air all the time in order to eliminate intrusion of chips or coolant.
- There is a case that air sensing cannot be successfully made as designed when it is used out of the above usage. Contact Technical service center for more details.

Relation between sensor air pressure, PAL sensor and piston stroke

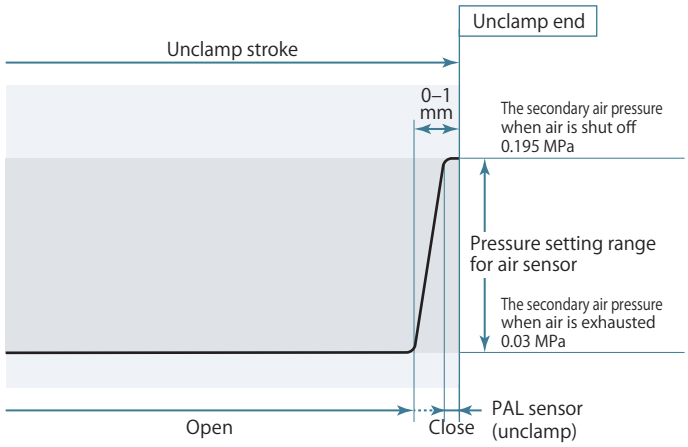

The diagram shown above indicates the relation between the PAL sensor, piston stroke, and secondary air pressure. (The pressure shown in the diagram is a reference based on the 0.2 MPa of primary air pressure for one piece of clamp.)

Since the new PAL sensor works with less air-leakage compared to previous sensor valve,

- Enhances the pressure setting range of the sensor which enables the sensor to set easily. (Ex. Pressure setting range 0.03–0.195 MPa in the diagram)
- Allows the use for a number of clamps by one air sensor because of better pressure holding when air is shut off. (Maximum number of clamps to be detected by one sensor is 10.)
- Allows to choose less air-consumed, i.e. small orifice diameter type, air sensor.
- Can create large differential-pressure when opening and closing the PAL sensor so that sensor primary pressure can be set as low as possible and reduce the consumption of air.

New PAL sensor

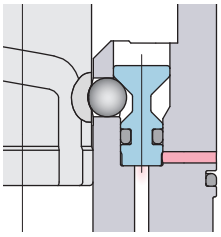

Poppet structure ensures superior sealing performance and can create large differential-pressure when the valve is opening and closing, and air leakage can be minimized.

Previous sensor valve

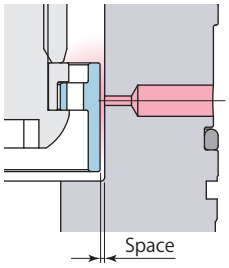

Air leaks easily due to a large space.

CTM□-□B	Swing clamp Short stroke Unclamp sensor model	7MPa	Double acting

Dimensions

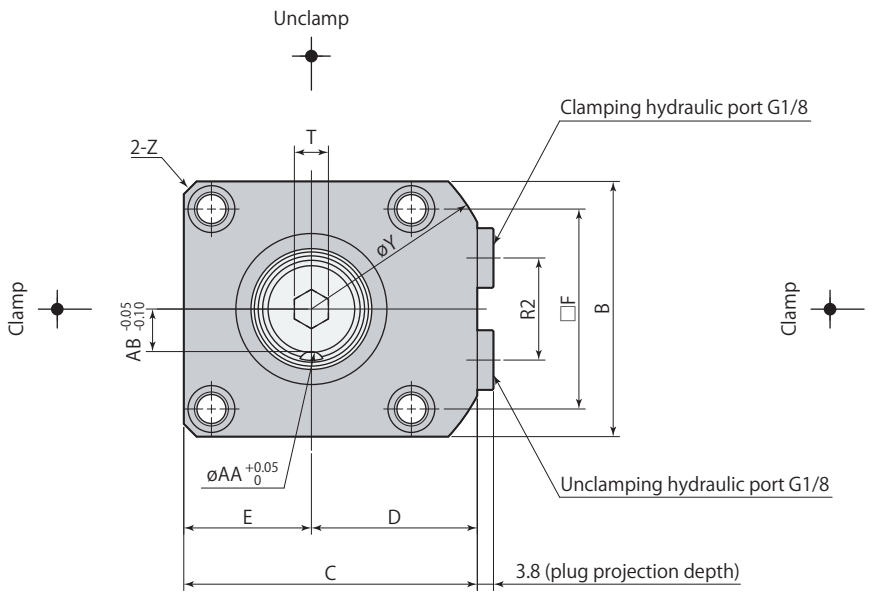

This diagram indicates the arm positioning pin groove at unclamped condition.

Swing direction L (counter-clockwise)

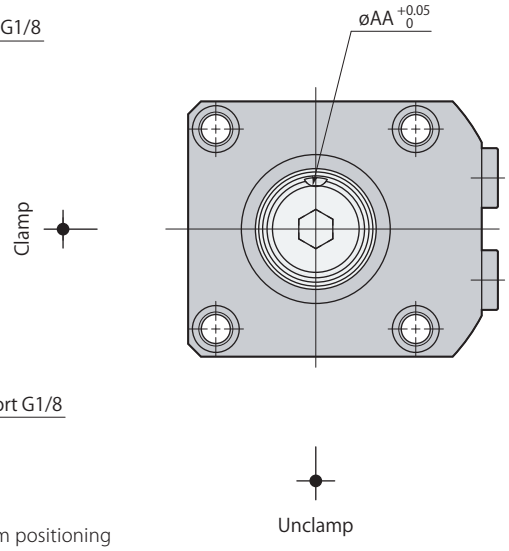

Swing direction R (clockwise)

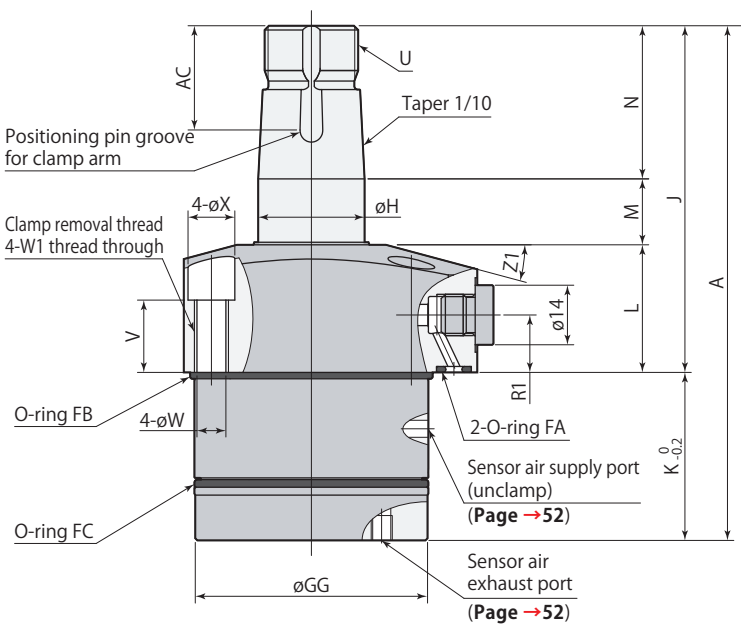

Unclamp

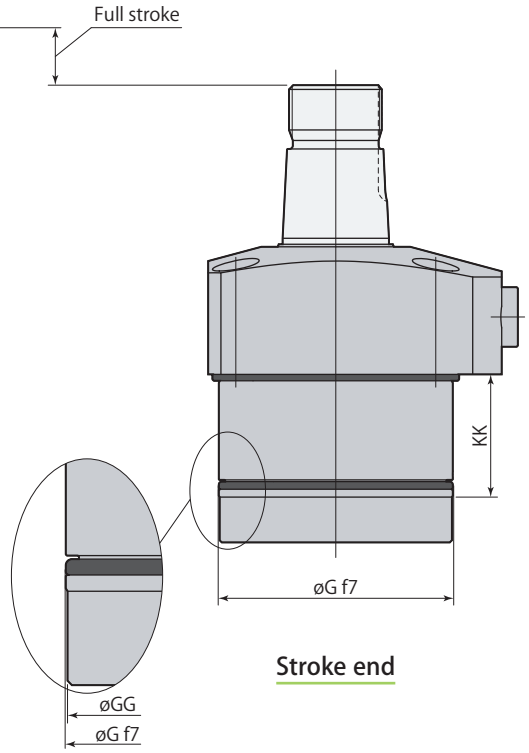

Stroke end

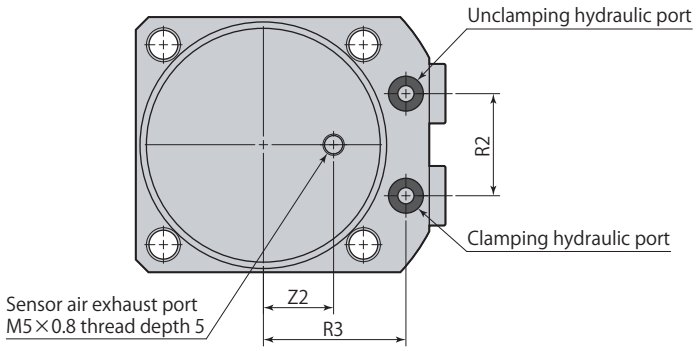

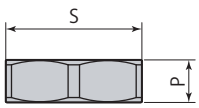

Hex nut for arm mount

- Hex nut for arm mount is included.
- Refer to **page →72** for the details of perfect nut.
- Clamp arm, positioning pin and mounting screws are not included.

mm

Model		CTM04-□B	CTM05-□B	CTM06-□B	CTM10-□B
Cylinder capacity (cm³)	Clamp	5.8	8.7	13.9	20.0
	Unclamp	8.7	13.4	20.5	30.6
A		99.5	107.5	121	132.5
B		45	51	60	70
C		54	61	69	81
D		31.5	35.5	39	46
E		22.5	25.5	30	35
F		34	40	47	55
øG		$40^{-0.025}_{-0.050}$	$48^{-0.025}_{-0.050}$	$55^{-0.030}_{-0.060}$	$65^{-0.030}_{-0.060}$
øGG		39.7	47.6	54.6	64.6
øH		18	22	25	30
J		65.5	74.5	81.5	88
K		34	33	39.5	44.5
KK		26	22.5	28.5	31
L		25	28	30	31
M		13.5	14.5	15.5	17
N		27	32	36	40
P		8	9	10	11
R1		12.5	14	13.5	14
R2		18	22	24	30
R3		26	30	33.5	39.5
S (nut width across flats)		24	30	32	41
T (hex socket)		6	8	8	10
U		M16×1.5	M20×1.5	M22×1.5	M27×1.5
V		15	17.5	17	17
øW		5.5	5.5	6.8	6.8
W1		M6×1	M6×1	M8×1.25	M8×1.25
øX		9	9	11	11
øY		73	83	88	106
Z		C3	C3	C3	C4
Z1		12°	15°	15°	15°
Z2		11	13.5	16.5	19
øAA (pin groove diameter)		4	5	6	6
AB		7	9	10	12.5
AC		18.5	21.5	24.5	27.5
Positioning pin (dowel pin)		ø4(h8)×10	ø5(h8)×12	ø6(h8)×14	ø6(h8)×16
O-ring FA (fluorocarbon hardness Hs90)		P5	P5	P5	P7
O-ring FB (fluorocarbon hardness Hs70)		38×1.5 (inner diameter×thickness)	AS568-031	AS568-034	AS568-037
O-ring FC (fluorocarbon hardness Hs70)		AS568-028	AS568-031	AS568-033	AS568-036
Taper sleeve		CTH04-MS	CTH05-MS	CTH06-MS	CTH10-MS
Flow control valve*	Meter-in	VCF01S	VCF01S	VCF01S	VCF01
	Meter-out	VCF01S-O	VCF01S-O	VCF01S-O	VCF01-O
Air bleeding valve		VCE01	VCE01	VCE01	VCE01

*: Select the right model of VCF according to the size of the clamp.

Refer to each page for the details of options.

● Taper sleeve **page →70** ● Flow control valve **page →94** ● Air bleeding valve **page →96**

Mounting details

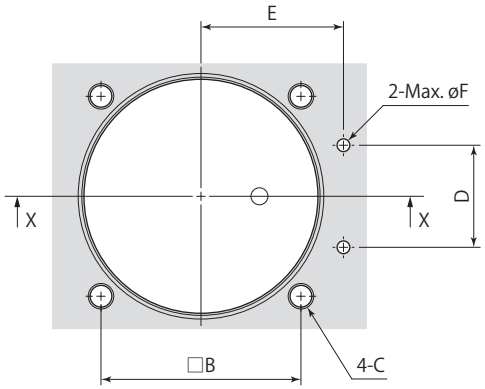

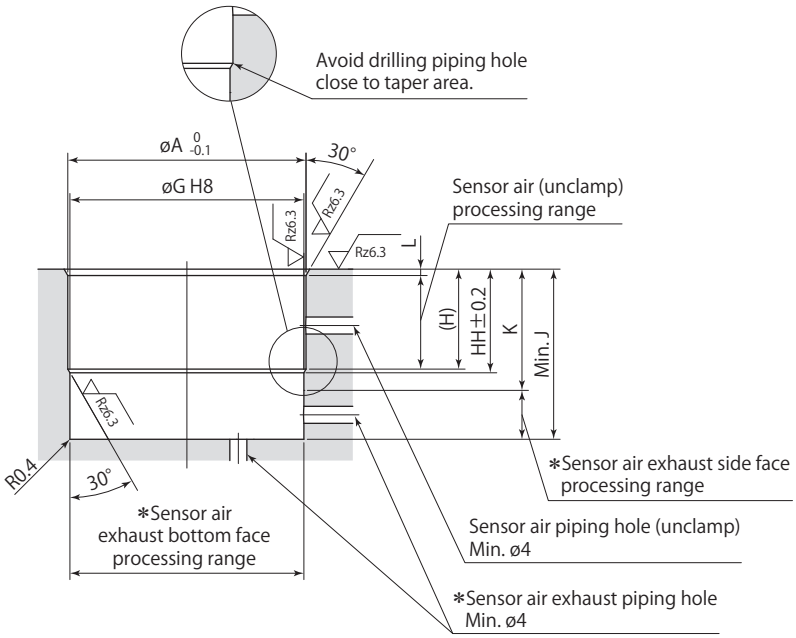

In blind hole X-X

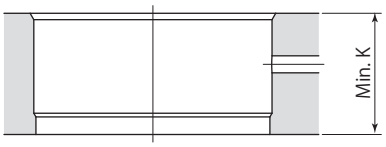

In through hole X-X

*: Sensor air exhaust piping hole must be made on either side or bottom face.

Rz: ISO4287(1997)

- Apply an appropriate amount of grease to the chamfer and the bore when mounting. Excessive grease may be a blockage in the air passage, causing malfunction of the sensor.
- The 30° taper machining must be provided to avoid the damage of the O-ring. Ensure that there are no interference on taper area when drilling the hole for sensor air.

Mounting details

mm

Model	CTM04-□B	CTM05-□B	CTM06-□B	CTM10-□B
øA	40.8	49	56	66
B	34	40	47	55
C	M5	M5	M6	M6
D	18	22	24	30
E	26	30	33.5	39.5
øF	3	3	3	5
øG	$40^{+0.039}_{0}$	$48^{+0.039}_{0}$	$55^{+0.046}_{0}$	$65^{+0.046}_{0}$
H	21	17.5	23.5	26
HH	21.7	18.4	24.4	26.9
J	34.5	33.5	40	45
K	26	22.5	28.5	31
L	1.2	1.5	1.5	1.5

Caution for piping

Refer to the diagram shown below for the sensor air exhaust port.

Mounting in blind hole
(Sensor air exhaust：side face)

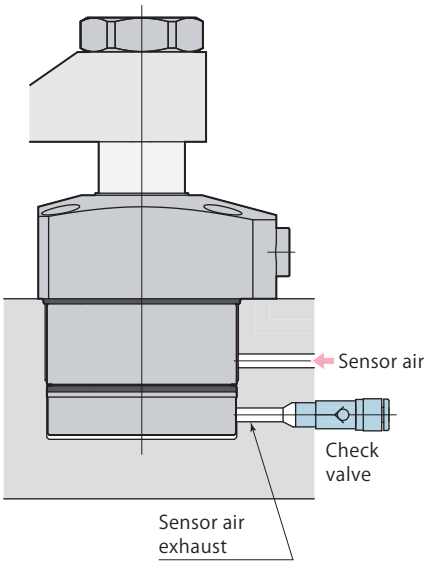

Mounting in blind hole
(Sensor air exhaust：bottom face)

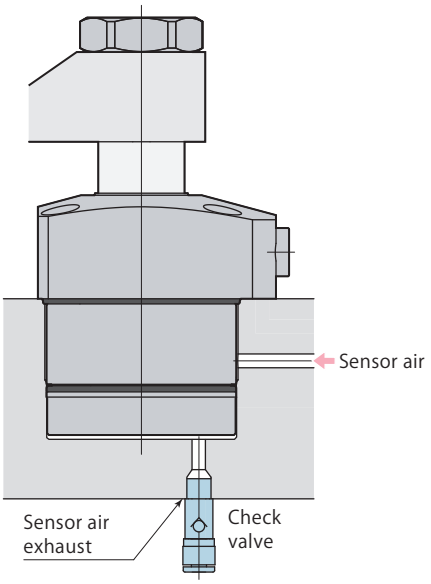

Mounting in through hole

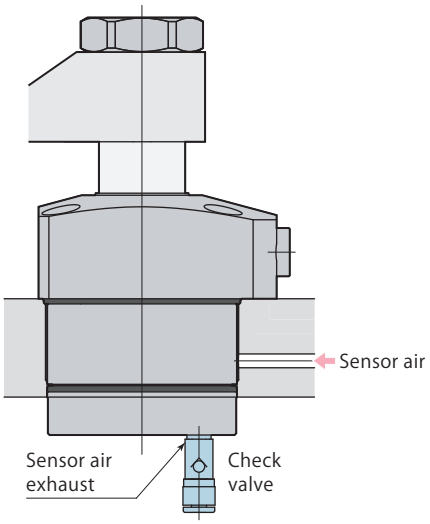

● Use a check valve with cracking pressure of 0.005 MPa or less if there is a risk of metal chips or coolant intrusion. Recommended check valve：AKH or AKB series manufactured by SMC.

CTM□-□S□B	Swing clamp Long stroke Unclamp sensor model	7MPa	Double acting

Dimensions

CTM□-□S10B

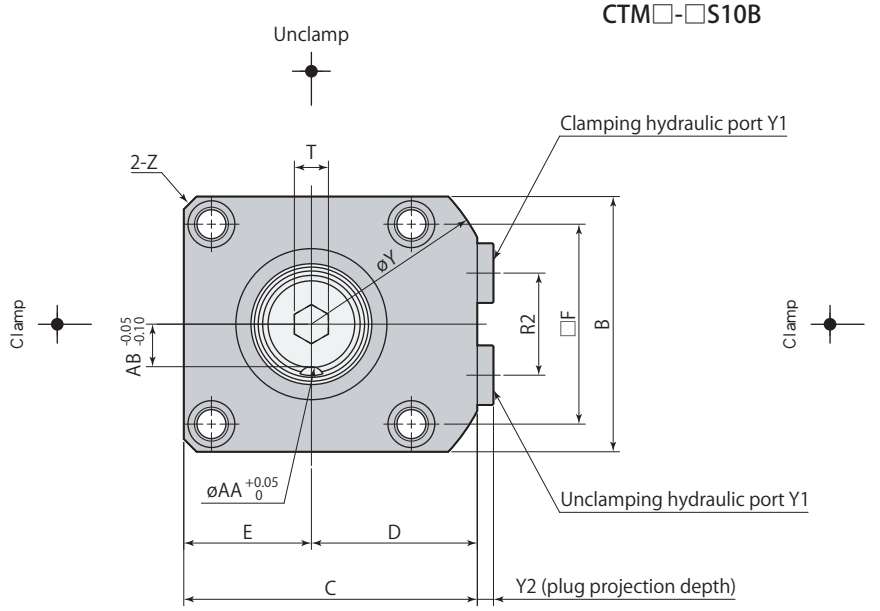

This diagram indicates the arm positioning pin groove at unclamped condition.

Swing direction L (counter-clockwise)

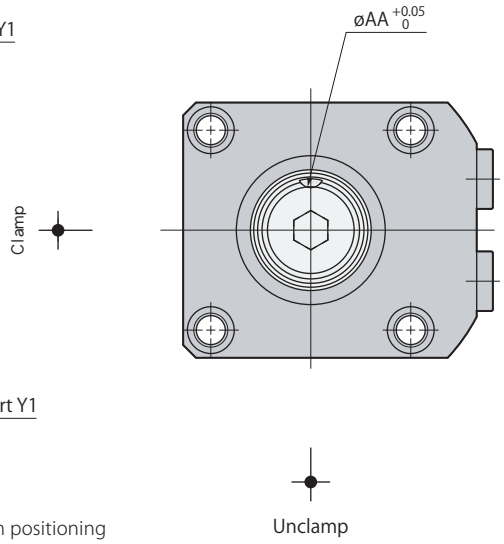

Swing direction R (clockwise)

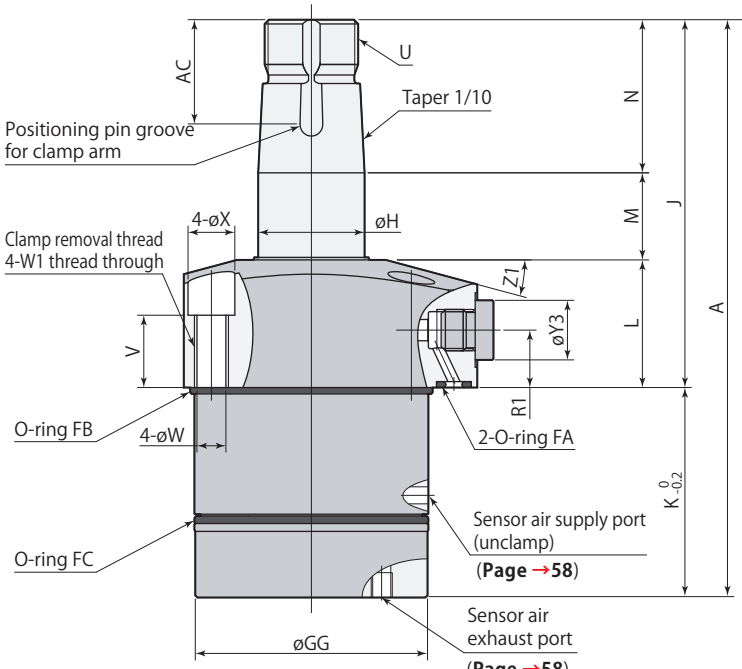

Unclamp

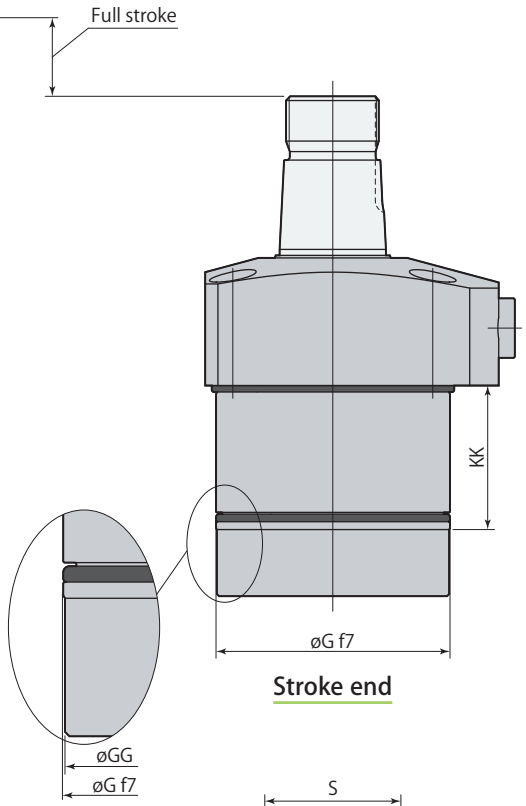

Stroke end

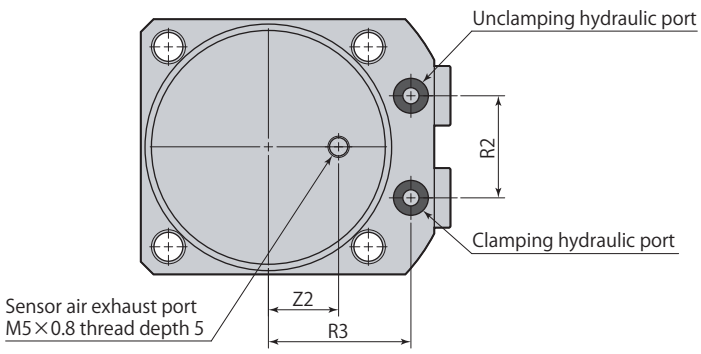

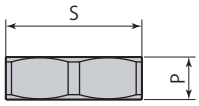

Hex nut for arm mount

- Hex nut for arm mount is included.
- Refer to **page →72** for the details of perfect nut.
- Clamp arm, positioning pin and mounting screws are not included.

CTM□-□S□B Swing clamp Long stroke Unclamp sensor model 7MPa Double acting

mm

Model		CTM04-□S10B	CTM05-□S10B	CTM06-□S10B	CTM10-□S10B	CTM16-□S10B
Cylinder capacity (cm³)	Clamp	8.3	12.2	19.0	26.7	44.6
	Unclamp	12.5	18.8	28.1	40.9	66.4
A		114.5	122.5	136	147.5	172.5
B		45	51	60	70	80
C		54	61	69	81	92
D		31.5	35.5	39	46	52
E		22.5	25.5	30	35	40
F		34	40	47	55	63
øG		$40^{-0.025}_{-0.050}$	$48^{-0.025}_{-0.050}$	$55^{-0.030}_{-0.060}$	$65^{-0.030}_{-0.060}$	$75^{-0.030}_{-0.060}$
øGG		39.7	47.6	54.6	64.6	74.6
øH		18	22	25	30	35.5
J		70.5	79.5	86.5	93	108
K		44	43	49.5	54.5	64.5
KK		31	27.5	33.5	36	42
L		25	28	30	31	38
M		18.5	19.5	20.5	22	24
N		27	32	36	40	46
P		8	9	10	11	11
R1		12.5	14	13.5	14	16
R2		18	22	24	30	32
R3		26	30	33.5	39.5	45
S (nut width across flats)		24	30	32	41	46
T (hex socket)		6	8	8	10	10
U		M16×1.5	M20×1.5	M22×1.5	M27×1.5	M30×1.5
V		15	17.5	17	17	21
øW		5.5	5.5	6.8	6.8	9
W1		M6×1	M6×1	M8×1.25	M8×1.25	M10×1.5
øX		9	9	11	11	14
øY		73	83	88	106	116
Y1		G1/8	G1/8	G1/8	G1/8	G1/4
Y2		3.8	3.8	3.8	3.8	4.8
øY3		14	14	14	14	19
Z		C3	C3	C3	C4	C5
Z1		12°	15°	15°	15°	15°
Z2		11	13.5	16.5	19	22.5
øAA (pin groove diameter)		4	5	6	6	8
AB		7	9	10	12.5	14
AC		18.5	21.5	24.5	27.5	28.5
Positioning pin (dowel pin)		ø4(h8)×10	ø5(h8)×12	ø6(h8)×14	ø6(h8)×16	ø8(h8)×16
O-ring FA (fluorocarbon hardness Hs90)		P5	P5	P5	P7	P7
O-ring FB (fluorocarbon hardness Hs70)		38×1.5 (inner diameter×thickness)	AS568-031	AS568-034	AS568-037	AS568-040
O-ring FC (fluorocarbon hardness Hs70)		AS568-028	AS568-031	AS568-033	AS568-036	AS568-039
Taper sleeve		CTH04-MS	CTH05-MS	CTH06-MS	CTH10-MS	CTH16-MS
Flow control valve*	Meter-in	VCF01S	VCF01S	VCF01S	VCF01	VCF02
	Meter-out	VCF01S-O	VCF01S-O	VCF01S-O	VCF01-O	VCF02-O
Air bleeding valve*		VCE01	VCE01	VCE01	VCE01	VCE02

*: Select the right model of VCF and VCE according to the size of the clamp.

Refer to each page for the details of options.

● Taper sleeve **page →70** ● Flow control valve **page →94** ● Air bleeding valve **page →96**

Dimensions

CTM□-□S20B

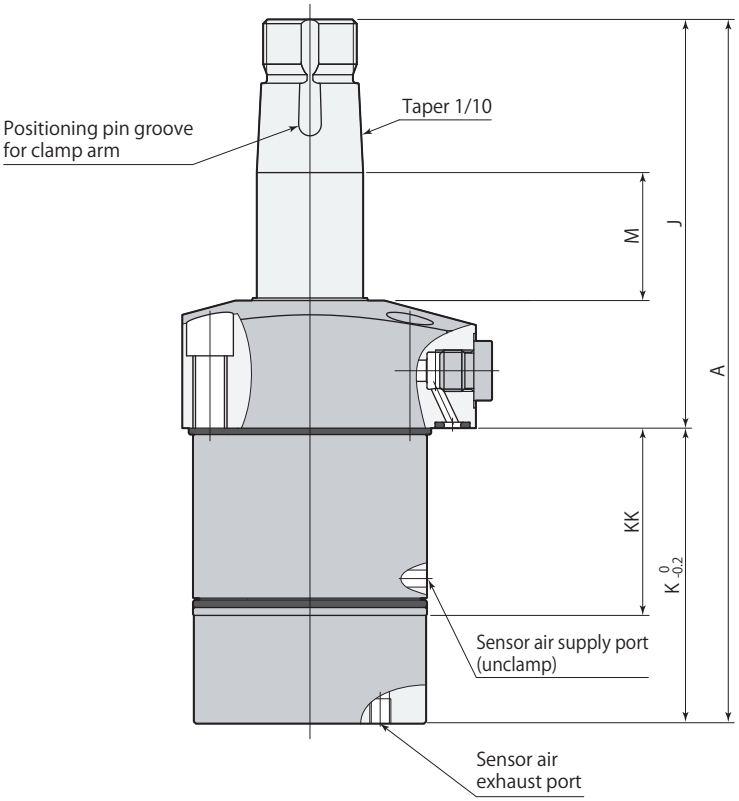

Unclamp

mm

Model		CTM04-□S20B	CTM05-□S20B	CTM06-□S20B	CTM10-□S20B	CTM16-□S20B
Cylinder capacity (cm³)	Clamp	13.3	19.1	29.3	40.1	64.9
	Unclamp	20.0	29.6	43.3	61.3	96.6
A		144.5	152.5	166	177.5	202.5
J		80.5	89.5	96.5	103	118
K		64	63	69.5	74.5	84.5
KK		41	37.5	43.5	46	52
M		28.5	29.5	30.5	32	34

● Refer to **pages →54**, **55** for other dimensions that are not shown in the diagram.

Refer to each page for the details of options.

● Taper sleeve **page →70** ● Flow control valve **page →94** ● Air bleeding valve **page →96**

Dimensions

CTM□-□S30B

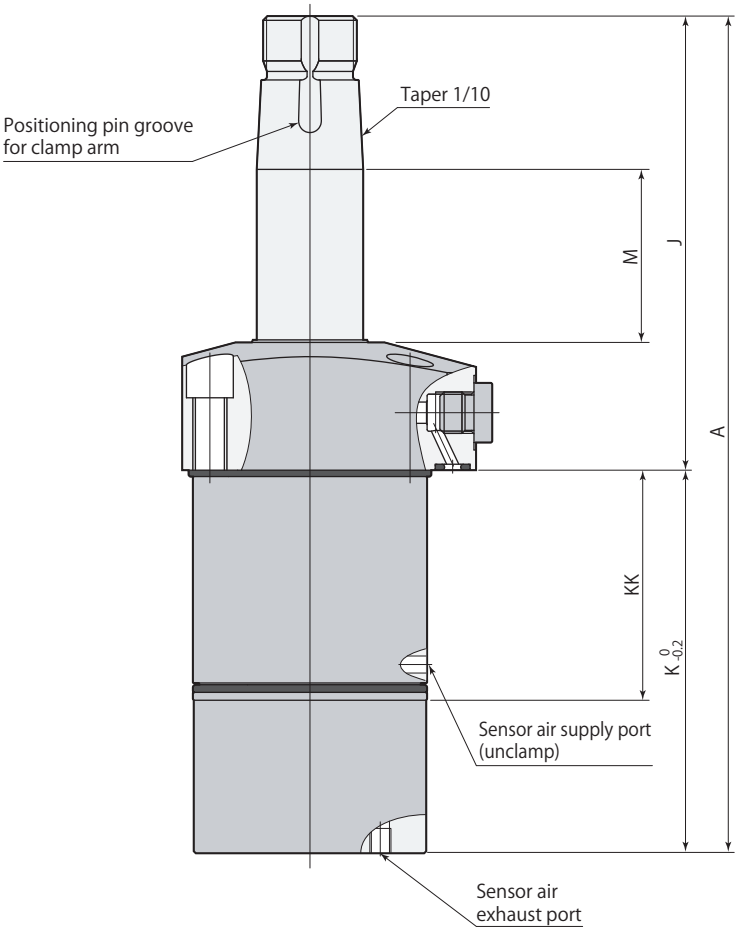

Unclamp

mm

Model		CTM06-□S30B	CTM10-□S30B	CTM16-□S30B
Cylinder capacity (cm³)	Clamp	39.6	53.4	85.2
	Unclamp	58.5	81.7	126.8
A		196	207.5	232.5
J		106.5	113	128
K		89.5	94.5	104.5
KK		53.5	56	62
M		40.5	42	44

● Refer to **pages →54**, **55** for other dimensions that are not shown in the diagram.

Refer to each page for the details of options.

● Taper sleeve **page →70** ● Flow control valve **page →94** ● Air bleeding valve **page →96**

Mounting details

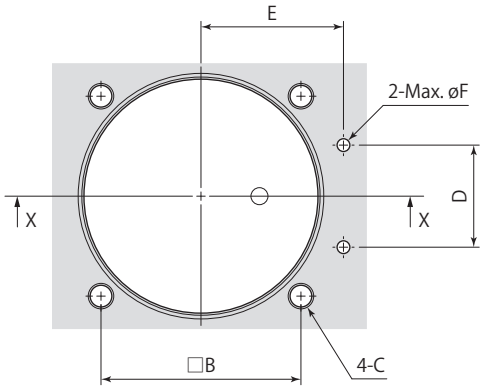

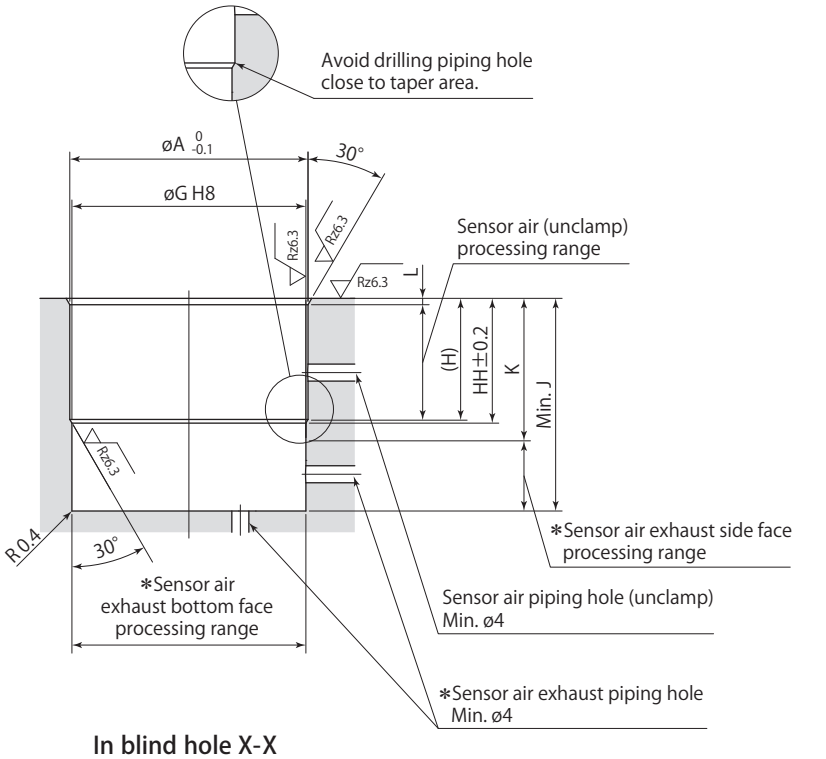

In blind hole X-X

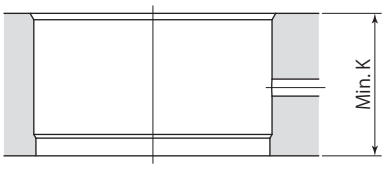

In through hole X-X

*: Sensor air exhaust piping hole must be made on either side or bottom face.

Rz: ISO4287(1997)

- Apply an appropriate amount of grease to the chamfer and the bore when mounting. Excessive grease may be a blockage in the air passage, causing malfunction of the sensor.
- The 30° taper machining must be provided to avoid the damage of the O-ring. Ensure that there are no interference on taper area when drilling the hole for sensor air.
- Refer to **page →53** for caution for piping.

Mounting details

mm

Model	CTM04-□S10B	CTM05-□S10B	CTM06-□S10B	CTM10-□S10B	CTM16-□S10B
øA	40.8	49	56	66	76
B	34	40	47	55	63
C	M5	M5	M6	M6	M8
D	18	22	24	30	32
E	26	30	33.5	39.5	45
øF	3	3	3	5	5
øG	$40^{+0.039}_{0}$	$48^{+0.039}_{0}$	$55^{+0.046}_{0}$	$65^{+0.046}_{0}$	$75^{+0.046}_{0}$
H	26	22.5	28.5	31	37
HH	26.7	23.4	29.4	31.9	37.9
J	44.5	43.5	50	55	65
K	31	27.5	33.5	36	42
L	1.2	1.5	1.5	1.5	1.5

mm

Model	CTM04-□S20B	CTM05-□S20B	CTM06-□S20B	CTM10-□S20B	CTM16-□S20B
H	36	32.5	38.5	41	47
HH	36.7	33.4	39.4	41.9	47.9
J	64.5	63.5	70	75	85
K	41	37.5	43.5	46	52

mm

Model	CTM06-□S30B	CTM10-□S30B	CTM16-□S30B
H	48.5	51	57
HH	49.4	51.9	57.9
J	90	95	105
K	53.5	56	62

Dimensions

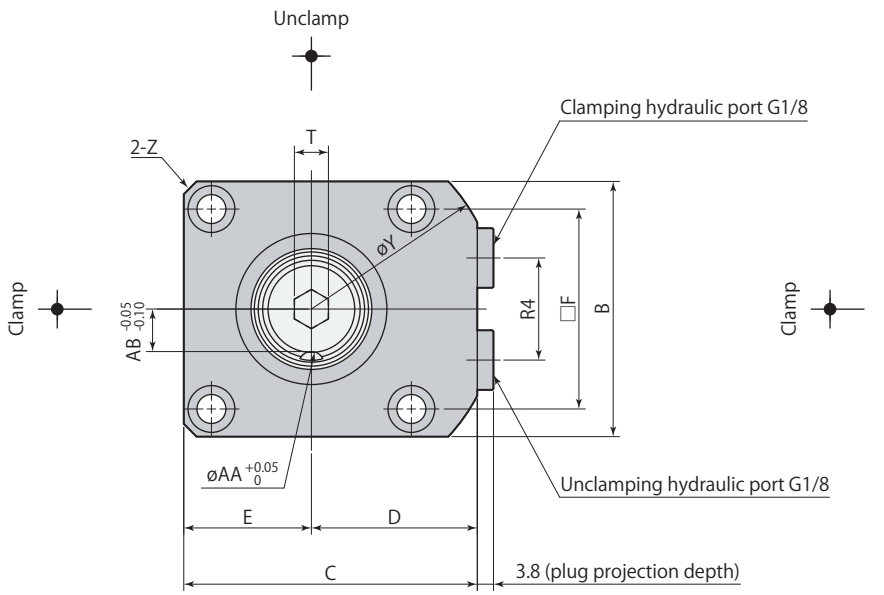

This diagram indicates the arm positioning pin groove at unclamped condition.

Swing direction L (counter-clockwise)

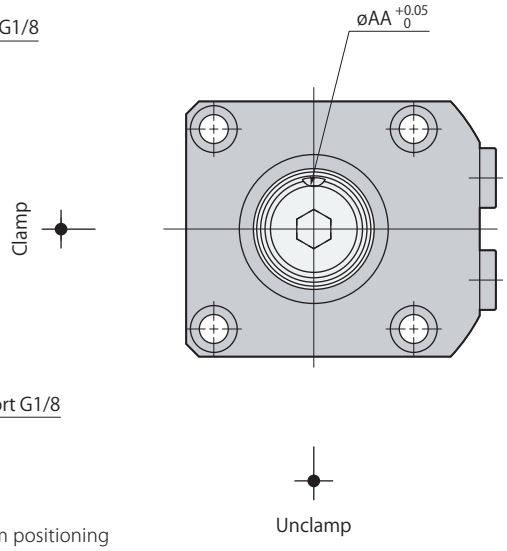

Swing direction R (clockwise)

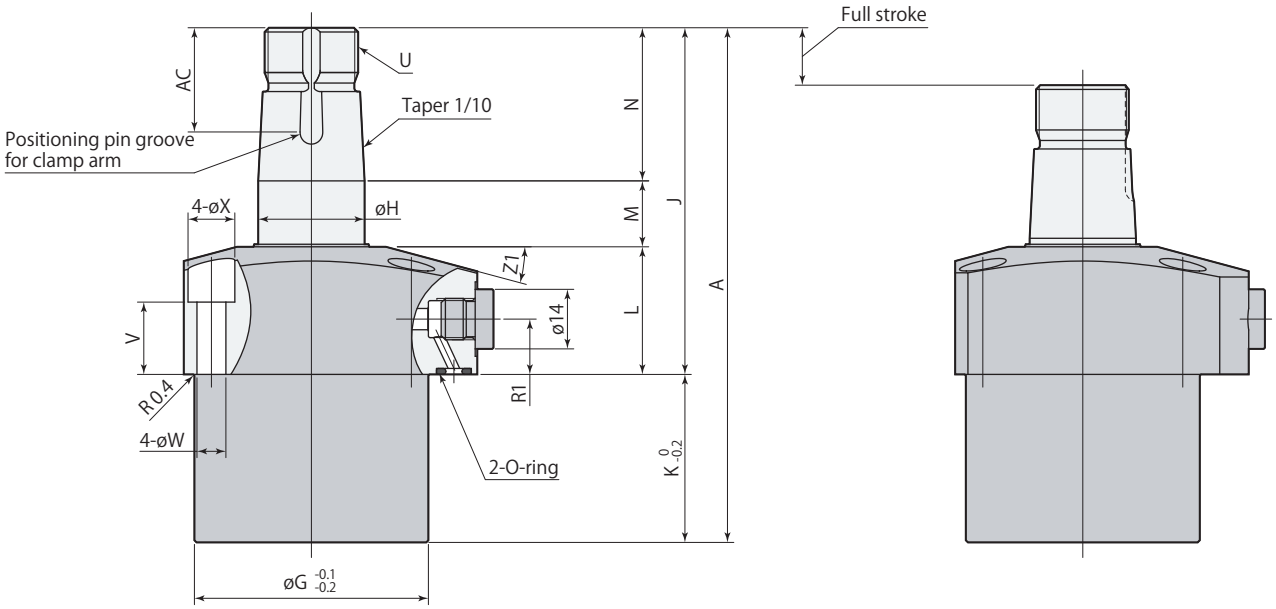

Unclamp

Stroke end

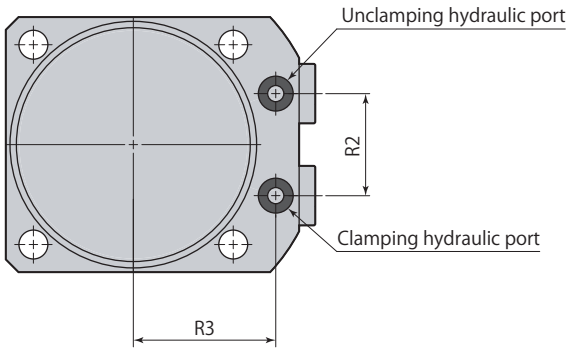

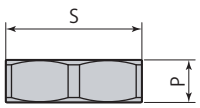

Hex nut for arm mount

- Hex nut for arm mount is included.
- Refer to **page →72** for the details of perfect nut.
- Clamp arm, positioning pin and mounting screws are not included.

mm

Model		CTM03-□N	CTM04-□N	CTM05-□N	CTM06-□N	CTM10-□N
Cylinder capacity (cm³)	Clamp	3.7	5.8	8.7	13.9	20.0
	Unclamp	5.6	8.7	13.4	20.5	30.6
A		92	99.5	107.5	121	132.5
B		40	45	51	60	70
C		49	54	61	69	81
D		29	31.5	35.5	39	46
E		20	22.5	25.5	30	35
F		31.4	34	40	47	55
øG		36	40	48	55	65
øH		15	18	22	25	30
J		61.5	65.5	74.5	81.5	88
K		30.5	34	33	39.5	44.5
L		25	25	28	30	31
M		12.5	13.5	14.5	15.5	17
N		24	27	32	36	40
P		7	8	9	10	11
R1		12	12.5	14	13.5	14
R2		16	18	22	24	30
R3		23.5	26	30	33.5	39.5
R4		18	18	22	24	30
S (nut width across flats)		22	24	30	32	41
T (hex socket)		5	6	8	8	10
U		M14×1.5	M16×1.5	M20×1.5	M22×1.5	M27×1.5
V		16	15	17.5	17	17
øW		4.5	5.5	5.5	6.8	6.8
øX		7.5	9	9	11	11
øY		66	73	83	88	106
Z		C2	C3	C3	C3	C4
Z1		15°	12°	15°	15°	15°
øAA (pin groove diameter)		4	4	5	6	6
AB		6	7	9	10	12.5
AC		17.5	18.5	21.5	24.5	27.5
Positioning pin (dowel pin)		ø4(h8)×10	ø4(h8)×10	ø5(h8)×12	ø6(h8)×14	ø6(h8)×16
O-ring (fluorocarbon hardness Hs90)		P5	P5	P5	P5	P7
Taper sleeve		CTH03-MS	CTH04-MS	CTH05-MS	CTH06-MS	CTH10-MS
Flow control valve*	Meter-in	VCF01S	VCF01S	VCF01S	VCF01S	VCF01
	Meter-out	VCF01S-O	VCF01S-O	VCF01S-O	VCF01S-O	VCF01-O
Air bleeding valve		VCE01	VCE01	VCE01	VCE01	VCE01

*: Select the right model of VCF according to the size of the clamp.

Refer to each page for the details of options.

● Taper sleeve **page →70** ● Flow control valve **page →94** ● Air bleeding valve **page →96**

Mounting details

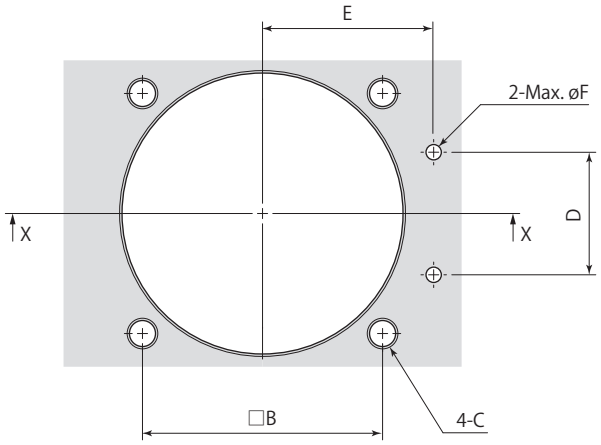

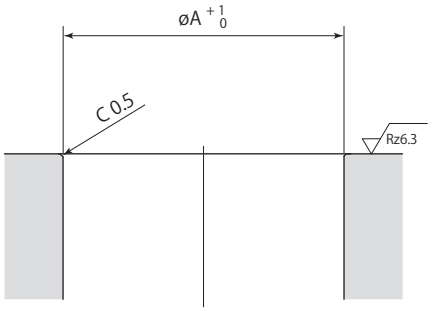

X-X

Rz: ISO4287(1997)

mm

Model	CTM03-□N	CTM04-□N	CTM05-□N	CTM06-□N	CTM10-□N
øA	36	40	48	55	65
B	31.4	34	40	47	55
C	M4	M5	M5	M6	M6
D	16	18	22	24	30
E	23.5	26	30	33.5	39.5
øF	3	3	3	3	5

CTM□-□S□N	Swing clamp Long stroke Compact model	7MPa	Double acting

Dimensions

CTM□-□S10N

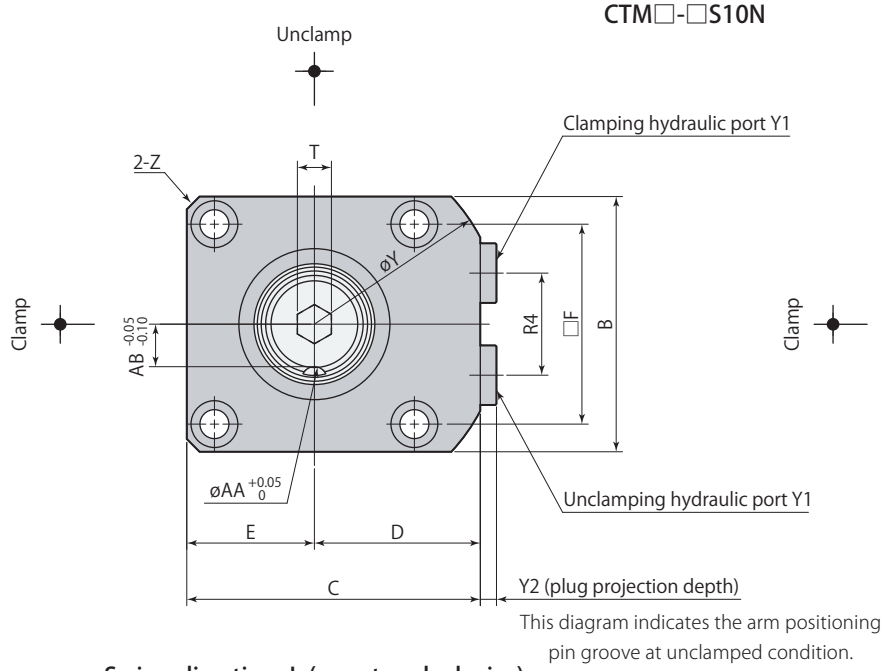

Swing direction L (counter-clockwise)

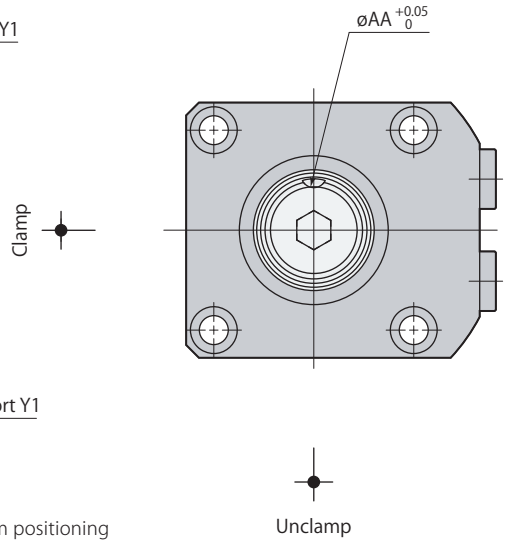

Swing direction R (clockwise)

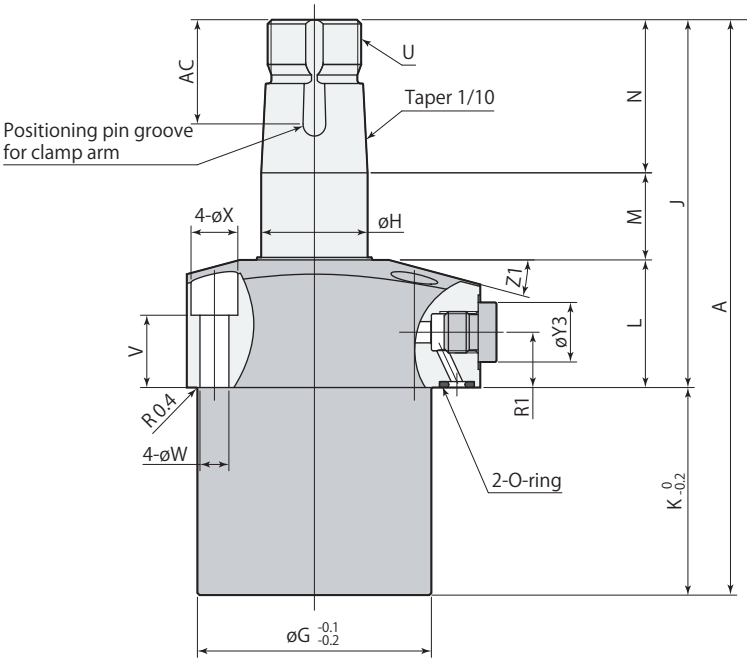

Unclamp

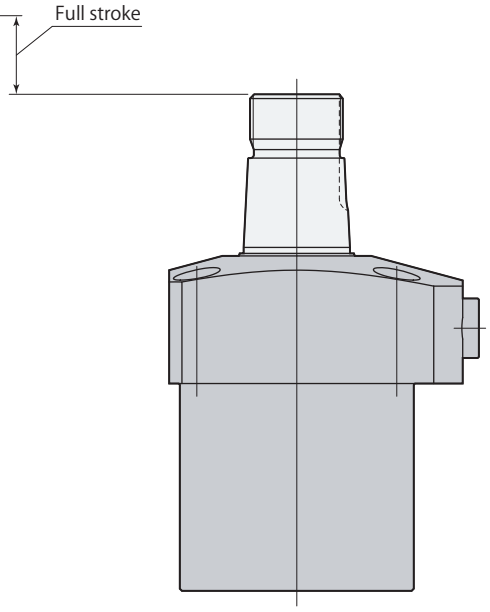

Stroke end

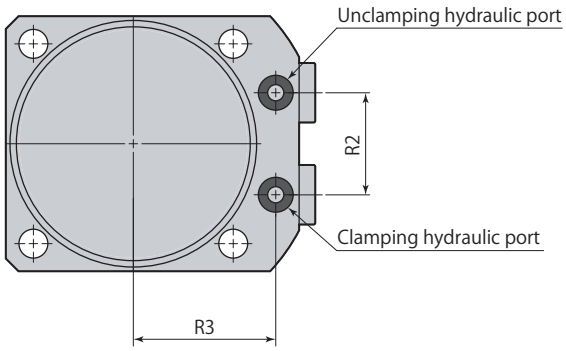

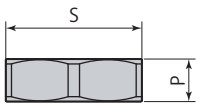

Hex nut for arm mount

- Hex nut for arm mount is included.
- Refer to **page →72** for the details of perfect nut.
- Clamp arm, positioning pin and mounting screws are not included.

mm

Model		CTM03-□S10N	CTM04-□S10N	CTM05-□S10N	CTM06-□S10N	CTM10-□S10N	CTM16-□S10N
Cylinder capacity (cm³)	Clamp	5.5	8.3	12.2	19.0	26.7	44.6
	Unclamp	8.2	12.5	18.8	28.1	40.9	66.4
A		107	114.5	122.5	136	147.5	172.5
B		40	45	51	60	70	80
C		49	54	61	69	81	92
D		29	31.5	35.5	39	46	52
E		20	22.5	25.5	30	35	40
F		31.4	34	40	47	55	63
øG		36	40	48	55	65	75
øH		15	18	22	25	30	35.5
J		66.5	70.5	79.5	86.5	93	108
K		40.5	44	43	49.5	54.5	64.5
L		25	25	28	30	31	38
M		17.5	18.5	19.5	20.5	22	24
N		24	27	32	36	40	46
P		7	8	9	10	11	11
R1		12	12.5	14	13.5	14	16
R2		16	18	22	24	30	32
R3		23.5	26	30	33.5	39.5	45
R4		18	18	22	24	30	32
S (nut width across flats)		22	24	30	32	41	46
T (hex socket)		5	6	8	8	10	10
U		M14×1.5	M16×1.5	M20×1.5	M22×1.5	M27×1.5	M30×1.5
V		16	15	17.5	17	17	21
øW		4.5	5.5	5.5	6.8	6.8	9
øX		7.5	9	9	11	11	14
øY		66	73	83	88	106	116
Y1		G1/8	G1/8	G1/8	G1/8	G1/8	G1/4
Y2		3.8	3.8	3.8	3.8	3.8	4.8
øY3		14	14	14	14	14	19
Z		C2	C3	C3	C3	C4	C5
Z1		15°	12°	15°	15°	15°	15°
øAA (pin groove diameter)		4	4	5	6	6	8
AB		6	7	9	10	12.5	14
AC		17.5	18.5	21.5	24.5	27.5	28.5
Positioning pin (dowel pin)		ø4(h8)×10	ø4(h8)×10	ø5(h8)×12	ø6(h8)×14	ø6(h8)×16	ø8(h8)×16
O-ring (fluorocarbon hardness Hs90)		P5	P5	P5	P5	P7	P7
Taper sleeve		CTH03-MS	CTH04-MS	CTH05-MS	CTH06-MS	CTH10-MS	CTH16-MS
Flow control valve*	Meter-in	VCF01S	VCF01S	VCF01S	VCF01S	VCF01	VCF02
	Meter-out	VCF01S-O	VCF01S-O	VCF01S-O	VCF01S-O	VCF01-O	VCF02-O
Air bleeding valve*		VCE01	VCE01	VCE01	VCE01	VCE01	VCE02

*：Select the right model of VCF and VCE according to the size of the clamp.

Refer to each page for the details of options.

● Taper sleeve **page →70** ● Flow control valve **page →94** ● Air bleeding valve **page →96**

Dimensions

CTM□-□S20N

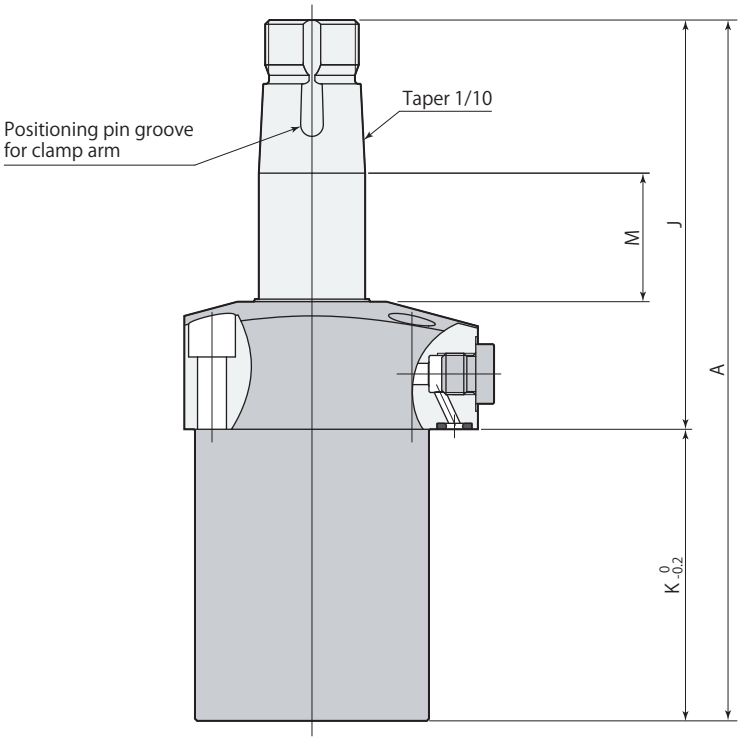

Unclamp

mm

Model		CTM03-□S20N	CTM04-□S20N	CTM05-□S20N	CTM06-□S20N	CTM10-□S20N	CTM16-□S20N
Cylinder capacity (cm³)	Clamp	9.0	13.3	19.1	29.3	40.1	64.9
	Unclamp	13.5	20.0	29.6	43.3	61.3	96.6
A		137	144.5	152.5	166	177.5	202.5
J		76.5	80.5	89.5	96.5	103	118
K		60.5	64	63	69.5	74.5	84.5
M		27.5	28.5	29.5	30.5	32	34

● Refer to **pages →64**, **65** for other dimensions that are not shown in the diagram.

Refer to each page for the details of options.

● Taper sleeve **page →70** ● Flow control valve **page →94** ● Air bleeding valve **page →96**

Dimensions

CTM□-□S30N

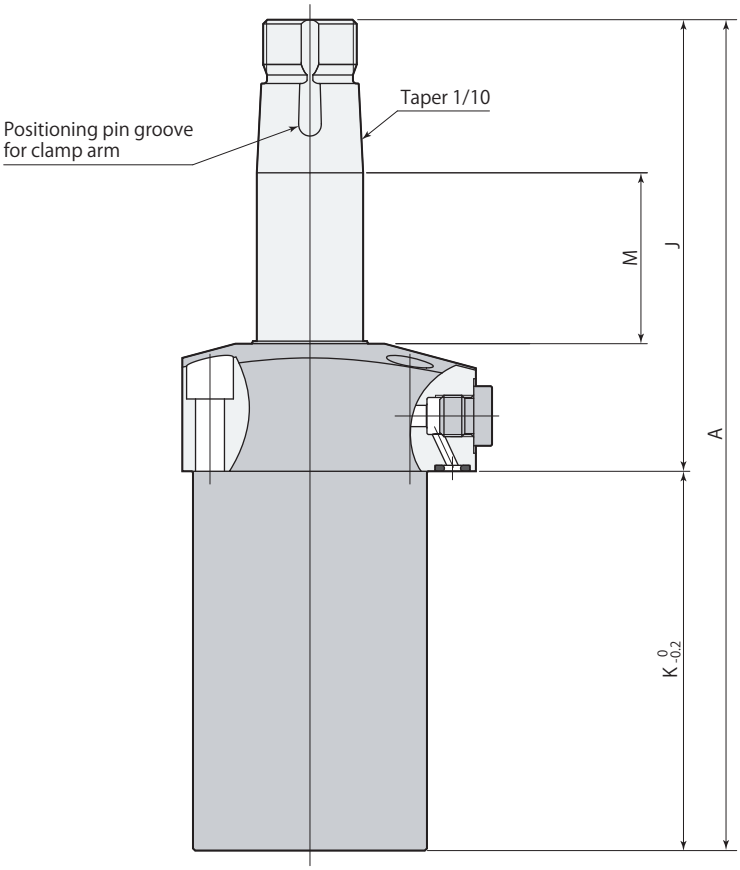

Unclamp

mm

Model		CTM06-□S30N	CTM10-□S30N	CTM16-□S30N
Cylinder capacity (cm³)	Clamp	39.6	53.4	85.2
	Unclamp	58.5	81.7	126.8
A		196	207.5	232.5
J		106.5	113	128
K		89.5	94.5	104.5
M		40.5	42	44

● Refer to **pages →64**, **65** for other dimensions that are not shown in the diagram.

Refer to each page for the details of options.

● Taper sleeve **page →70** ● Flow control valve **page →94** ● Air bleeding valve **page →96**

Mounting details

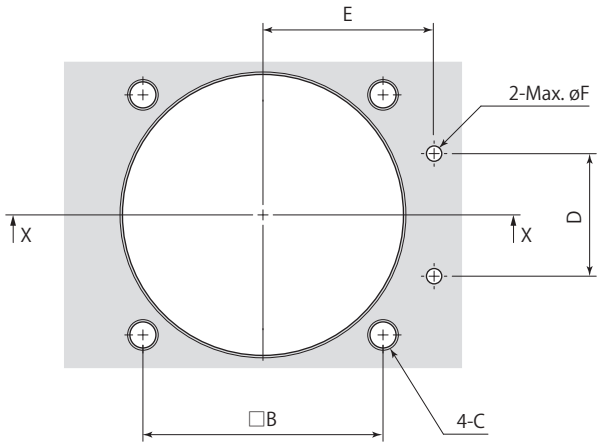

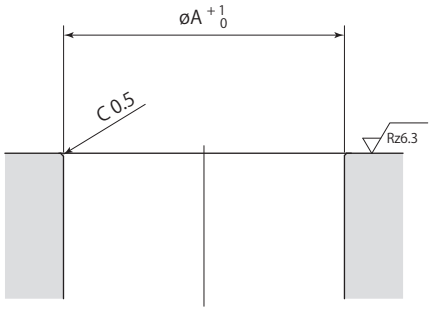

X-X

Rz: ISO4287(1997)

mm

Model	CTM03-□S□N	CTM04-□S□N	CTM05-□S□N	CTM06-□S□N	CTM10-□S□N	CTM16-□S□N
øA	36	40	48	55	65	75
B	31.4	34	40	47	55	63
C	M4	M5	M5	M6	M6	M8
D	16	18	22	24	30	32
E	23.5	26	30	33.5	39.5	45
øF	3	3	3	3	5	5

Clamp arm mounting details

Clamp arm is not included. Manufacture a clamp arm with the dimensions shown in the table below.

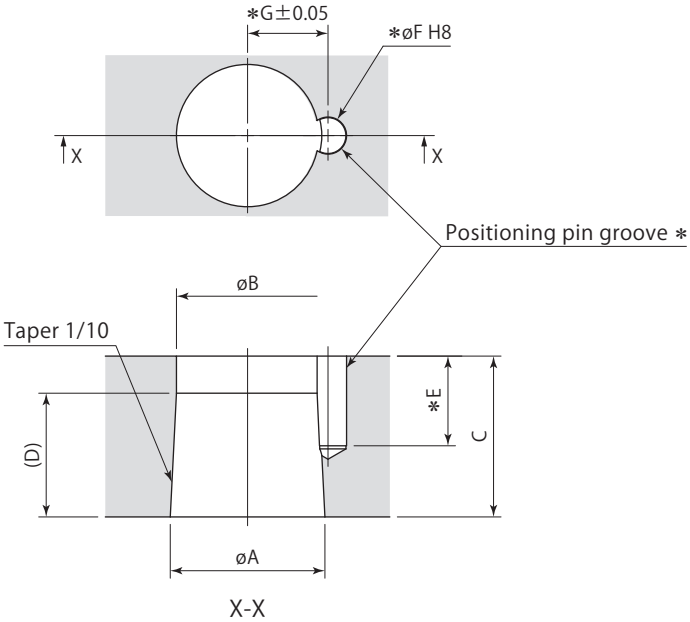

∗: No need to machine the pin groove (E, øF, G) unless positioning pin is used for the arm.
The positioning pin enables a clamp arm to locate on the clamp firmly and easily.

mm

Swing clamp	CTM03	CTM04	CTM05	CTM06	CTM10	CTM16
øA	$15^{-0.016}_{-0.034}$	$18^{-0.016}_{-0.034}$	$22^{-0.020}_{-0.041}$	$25^{-0.020}_{-0.041}$	$30^{-0.020}_{-0.041}$	$35.5^{-0.025}_{-0.050}$
øB	14.1	16.5	20.5	23	28	(32)
C	17	19	23	26	29	35
D	9	15	15	20	20	–
E	10.5	10.5	12.5	14.5	16.5	17.5
øF (pin groove diameter)	$4^{+0.018}_{0}$	$4^{+0.018}_{0}$	$5^{+0.018}_{0}$	$6^{+0.018}_{0}$	$6^{+0.018}_{0}$	$8^{+0.022}_{0}$
G	8	9	11.5	13	15.5	18

CTH□-MS	Taper sleeve	Option

Taper sleeve

Size

CTH **03** / **04** / **05** / **06** / **10** / **16** — **MS** : Taper sleeve

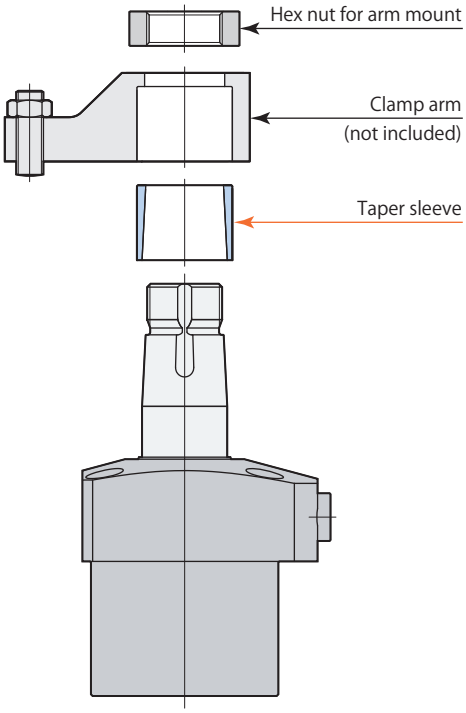

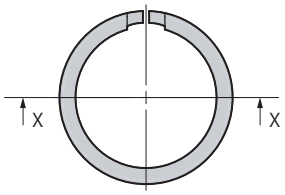

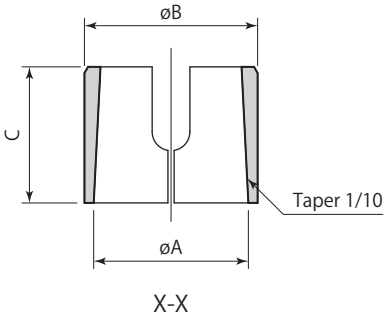

mm

Taper sleeve	CTH03-MS	CTH04-MS	CTH05-MS	CTH06-MS	CTH10-MS	CTH16-MS
Applicable swing clamp	CTM03	CTM04	CTM05	CTM06	CTM10	CTM16
øA	15	18	22	25	30	35.5
øB	17	20	25	28	34	40
C	14	16	19	22	25	31

Clamp arm mounting details

(Using taper sleeve)

Clamp arm is not included. Manufacture a clamp arm with the dimensions shown in the table below.

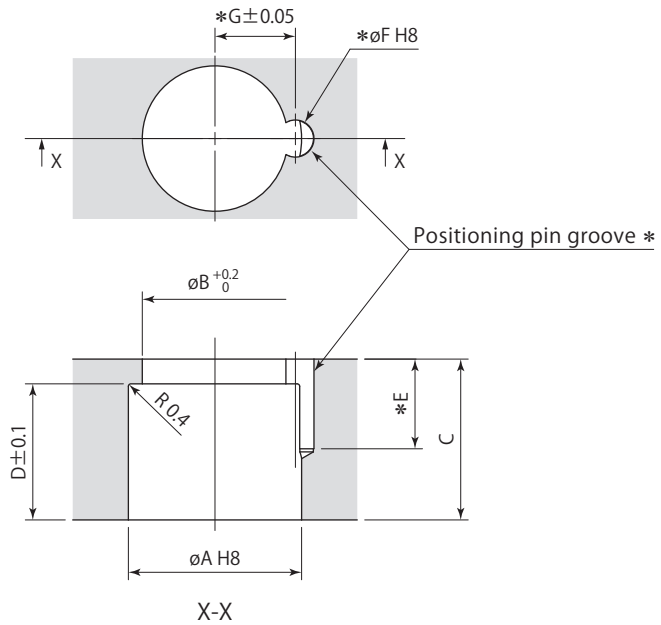

∗:No need to machine the pin groove (E, øF, G) unless positioning pin is used for the arm.
The positioning pin enables a clamp arm to locate on the clamp firmly and easily.

mm

Taper sleeve	CTH03-MS	CTH04-MS	CTH05-MS	CTH06-MS	CTH10-MS	CTH16-MS
Applicable swing clamp	CTM03	CTM04	CTM05	CTM06	CTM10	CTM16
øA	$17^{+0.027}_{0}$	$20^{+0.033}_{0}$	$25^{+0.033}_{0}$	$28^{+0.033}_{0}$	$34^{+0.039}_{0}$	$40^{+0.039}_{0}$
øB	15	17	21	23.5	29	33
C	17	19	23	26	29	35
D	14	16	19	22	25	31
E	10.5	10.5	12.5	14.5	16.5	17.5
øF (pin groove diameter)	$4^{+0.018}_{0}$	$4^{+0.018}_{0}$	$5^{+0.018}_{0}$	$6^{+0.018}_{0}$	$6^{+0.018}_{0}$	$8^{+0.022}_{0}$
G	8	9	11.5	13	15.5	18

CTH□-MN	Perfect nut	Option

Mounting arm firmly and easily.

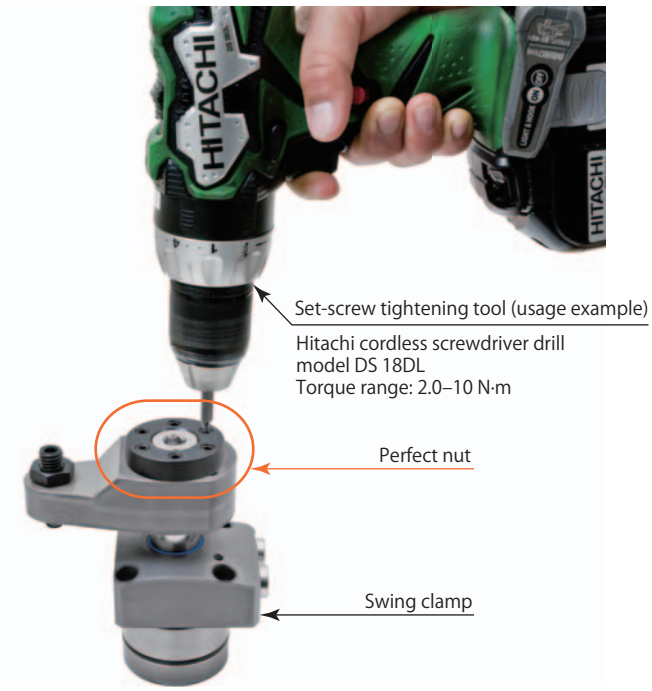

- Fastening or loosening the nut over the top of the clamp by an electric wrench helps to improve the workability on the machine table or the jig.

Less workability with conventional way of the mount.

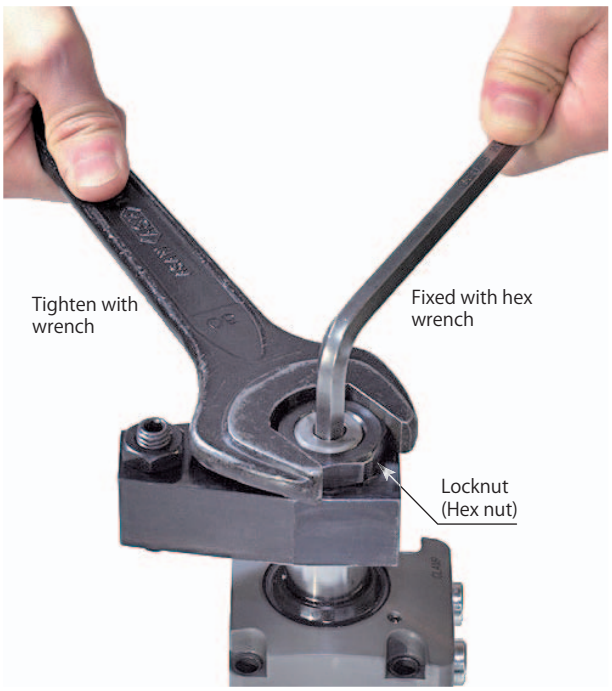

- To fasten or loosen the nut using the conventional way in a limited space makes the workability lower and may cause incomplete arm mounting.

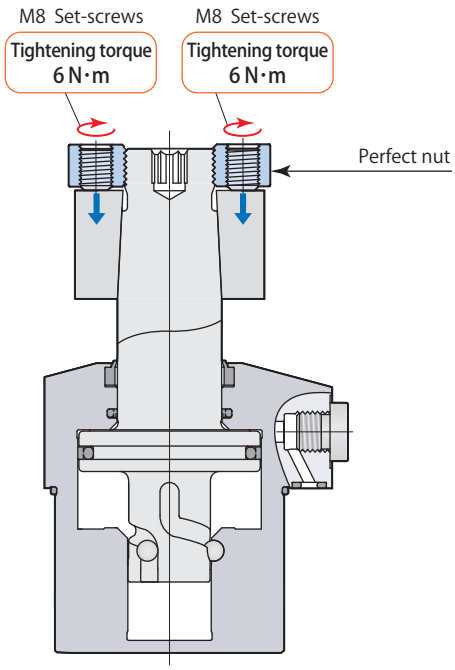

Swing clamp model CTM06

- The perfect nut needs minimum torque to tighten the set-screws and it can avoid giving the overload to the cam groove on the piston rod, which enables the arm to mount firmly and easily.

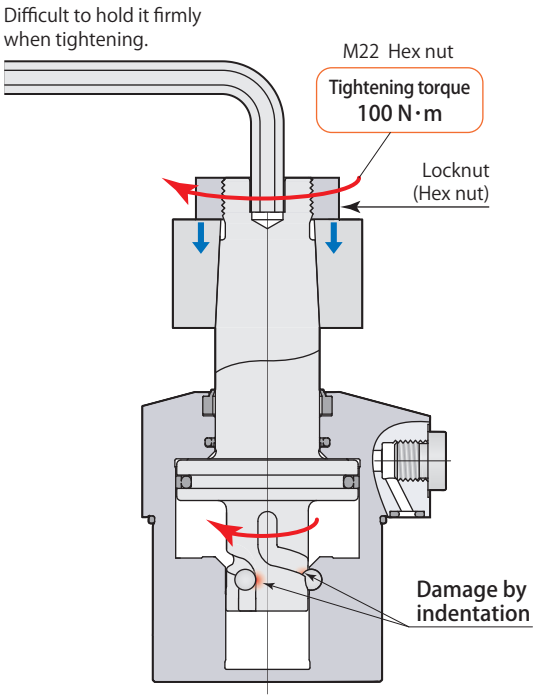

Swing clamp model CTM06

- The piston rod of the clamp must be fixed firmly to fasten the nut however it may cause damage on cam groove in case the rod is not fixed firmly.

Perfect nut

Size

04
05
06
10
16

CTH 06 — MN : Perfect nut

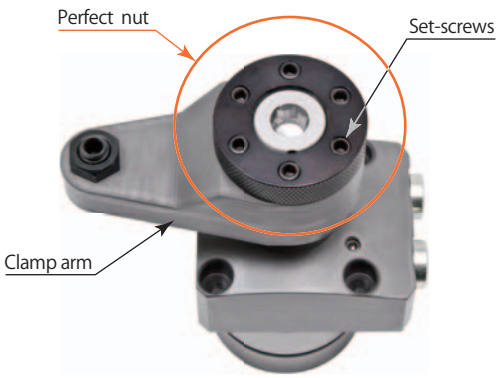

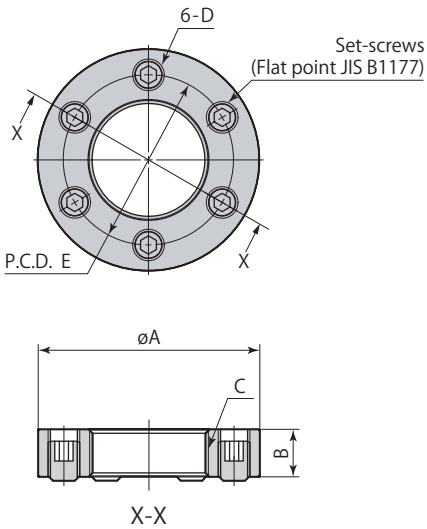

mm

Perfect nut		CTH04-MN	CTH05-MN	CTH06-MN	CTH10-MN	CTH16-MN
Applicable swing clamp		CTM04	CTM05	CTM06	CTM10	CTM16
Set-screws	Size	M6×1 length 8	M6×1 length 8	M8×1.25 length 10	M8×1.25 length 10	M8×1.25 length 10
	Recommended tightening torque	2.5 N·m	3 N·m	6 N·m	7 N·m	8 N·m
øA		32	40	48	54	56
B		8	9	10	11	11
C		M16×1.5	M20×1.5	M22×1.5	M27×1.5	M30×1.5
D		M6×1	M6×1	M8×1.25	M8×1.25	M8×1.25
E		24	30	35	41	43
Mass		0.04 kg	0.06 kg	0.12 kg	0.15 kg	0.17 kg

CTH□-MNR	Perfect release nut	Option

Dismounting arm easily.

- By simply fastening the draw screw the clamp arm can be easily removed, which does not need a specialized tool such as a gear puller.

Inferior dismounting workability using a gear puller.

- On the machine table top and the jig the working space is limited, it is difficult to pull up a clamp arm using a specialized tool such as a gear puller.

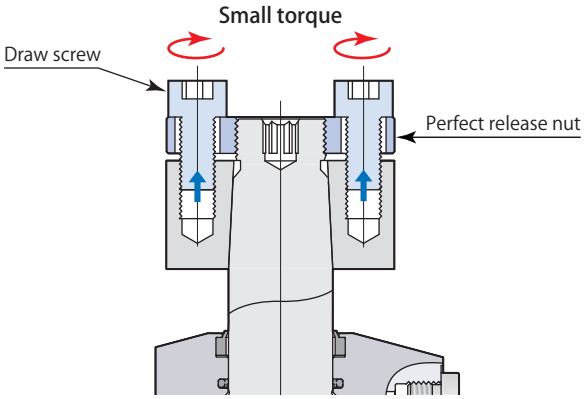

- The clamp arm can be dismounted easily and securely with a small torque.

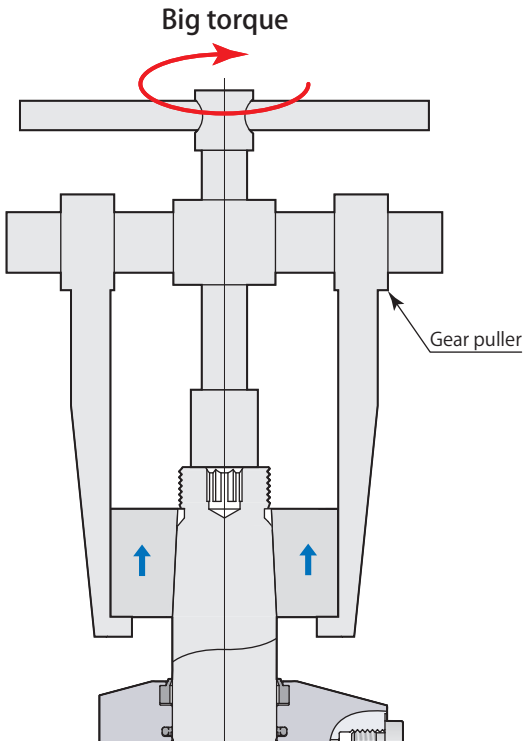

- A large torque is needed to pull the clamp arm off from the tapered area of the rod, which will be risky for a worker when the arm comes off suddenly.

Perfect release nut

Size

04
05
06
10
16

CTH — **MNR** : Perfect release nut

Clamp arm mounting details

(Using perfect release nut)

Drill a 1/10 taper hole into the clamp arm, and provide the tap holes for draw screws to remove the clamp arm.

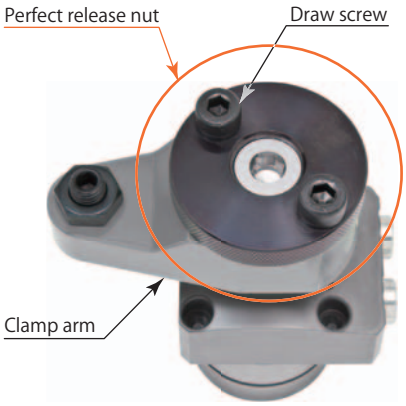

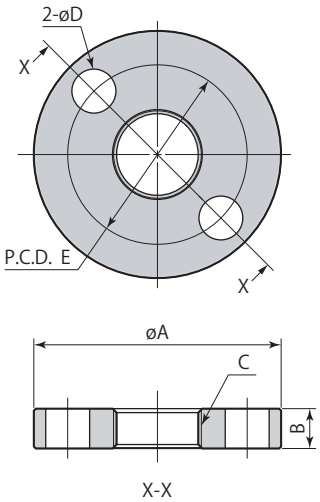

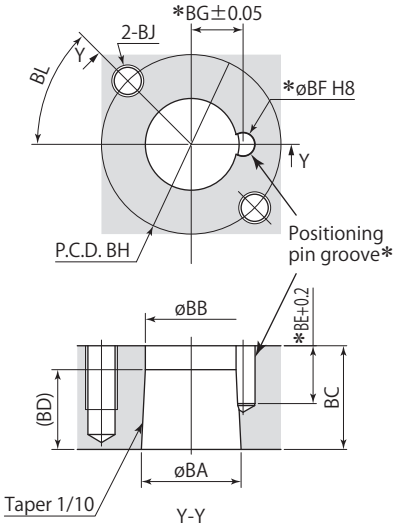

*: No need to machine the pin groove (BE, øBF, BG) unless positioning pin is used for the arm.

mm

Perfect release nut	CTH04-MNR	CTH05-MNR	CTH06-MNR	CTH10-MNR	CTH16-MNR
Applicable swing clamp	CTM04	CTM05	CTM06	CTM10	CTM16
Recommended draw screw	M6×1	M8×1.25	M10×1.5	M10×1.5	M10×1.5
øA	45	54	62	68	70
B	8	9	10	11	11
C	M16×1.5	M20×1.5	M22×1.5	M27×1.5	M30×1.5
øD	6.8	9	11	11	11
E	34	39	45	51	53
Mass	0.08 kg	0.13 kg	0.20 kg	0.25 kg	0.28 kg
øBA	$18^{-0.016}_{-0.034}$	$22^{-0.020}_{-0.041}$	$25^{-0.020}_{-0.041}$	$30^{-0.020}_{-0.041}$	$35.5^{-0.025}_{-0.050}$
øBB	16.5	20.5	23	28	(32)
BC	19	23	26	29	35
BD	15	15	20	20	–
BE	10.5	12.5	14.5	16.5	17.5
øBF (pin groove diameter)	$4^{+0.018}_{0}$	$5^{+0.018}_{0}$	$6^{+0.018}_{0}$	$6^{+0.018}_{0}$	$8^{+0.022}_{0}$
BG	9	11.5	13	15.5	18
BH	34	39	45	51	53
BJ	M6	M8	M10	M10	M10
BL	Standard 60° allowable range 45°–70° (within range that there is no interference with set-screws)				

● Draw screws are not included with perfect release nut.

Perfect nut (Arm mounting guide)

1. Set clamp arm and turn perfect nut as tight as it gets manually.
2. Turn back perfect nut to the position where two set-screws hold against reactive force of arm, as shown in diagram below.
3. Tighten set-screws with recommended torque in order of ❶ to ❻ in diagram below.
4. Once set-screws are tightened to ❻ , ❶ becomes loose, so retighten in sequence of ❶ to ❻ again.
5. Repeat tightening of set-screws ❶ to ❻ six times.
6. Repeat clamping and unclamping of workpiece five times (this operation allows taper section to become accustomed to use).
7. Return to unclamped condition and then retighten set-screws in order of ❶ to ❻.
   Once tightening in sequence of ❶ to ❻ is repeated three times, all set-screws will be fixed and clamp arm is completely mounted.

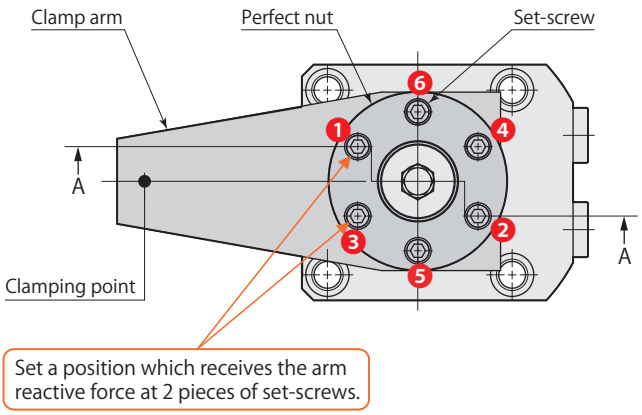

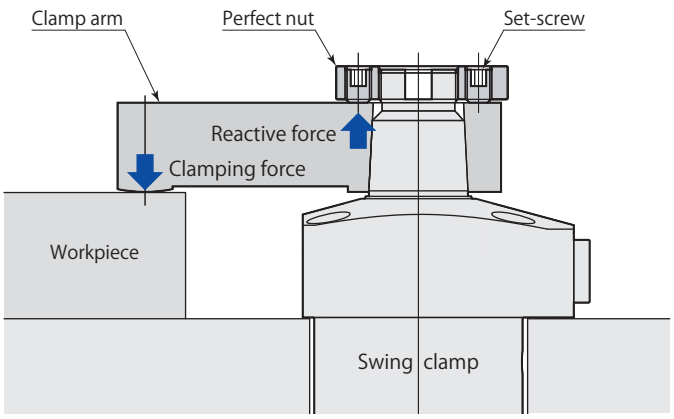

A-A

- The clamp arm may bite at the taper of the clamp rod and it will cause the demount failure if the set screw is tightened with excessive force. Be sure to use recommended torque when tightening.
- More secure tightening can be accomplished by applying some thread adhesive on set-screws.
  Recommended adhesive: LOCTITE 243 (medium strength type)

Perfect release nut (Arm dismounting guide)

1. Loosen all set-screws of perfect nut and dismount perfect nut from piston rod.
2. Mount perfect release nut and turn it until clamp arm comes into contact.
3. Turn perfect release nut back one or two more times, align the nut hole with tap hole of clamp arm and then mount the draw screws.
4. Once draw screws are tightened, clamp arm can be pulled off piston rod.

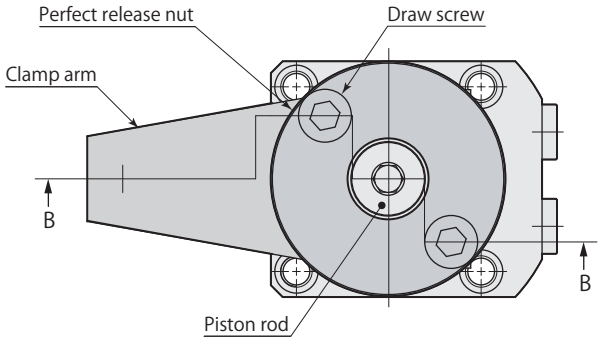

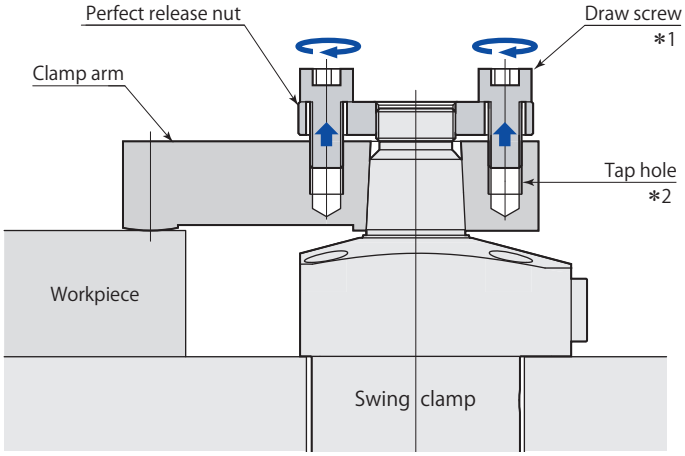

B-B

*1: Turn draw screws as a pair, alternately turning 45° to 90° at a time to tighten them evenly. Some movement is felt in hand as clamp arm comes off, but there is no danger involved in this procedure.

*2: Tap holes for draw screws are needed on clamp arm in order to use perfect release nut. Refer to clamp arm mounting details on **page →75** for details on tap holes.

Caution in use

In the event that a clamp arm is used with taper sleeve, the perfect release nut cannot remove the clamp arm due to the taper sleeve remaining on the piston rod. When using a taper sleeve, please use a gear puller (or similar) to remove clamp arm.
To be able to easily remove clamp arms using the perfect release nut, drill a 1/10 taper hole into the clamp arm. (Clamp arm mounting details refer to **page →75**)

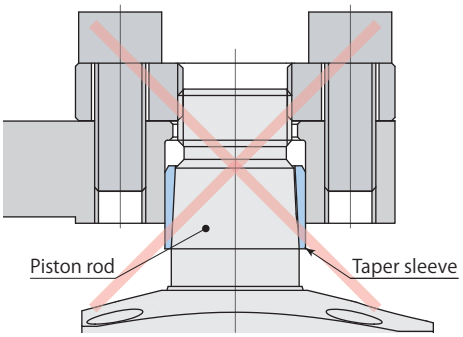

Quick arm change

● Clamp arm is replaceable quickly.

Toolless

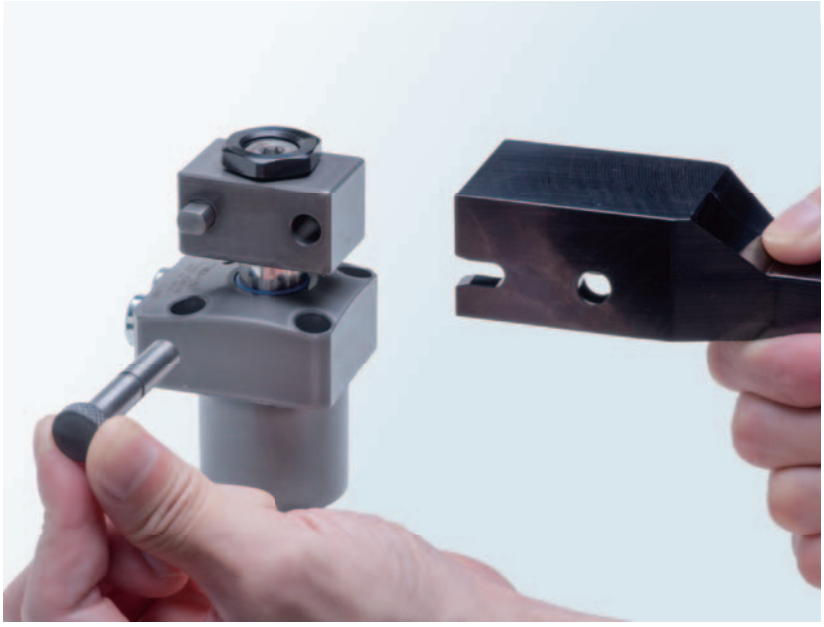

● No specific tools are required to replace,
simply place the arm and put the pin in.

Jig cost is reduced

- The arm makes the clamp versatile for many kinds of the workpiece and overall Jig cost is reduced.

Productivity improved

- The introduction of the arm enable the jig to be exchanged very quick and to reduce the set-up time, which ends up the increase of productivity.

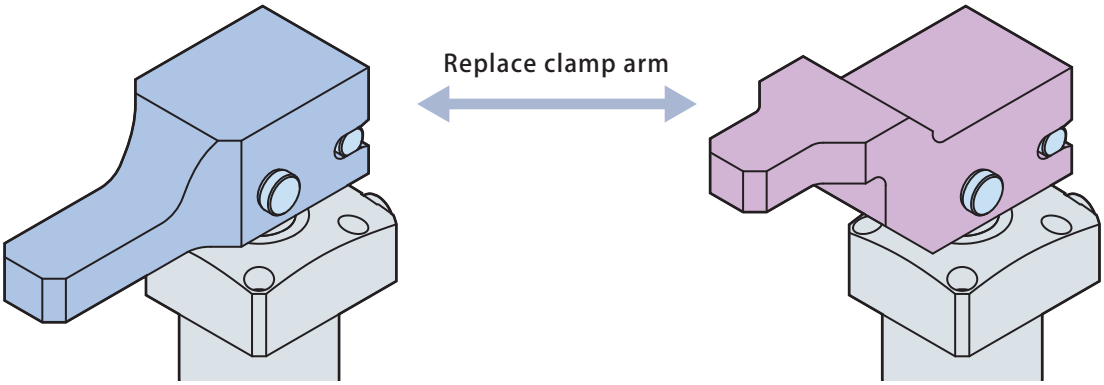

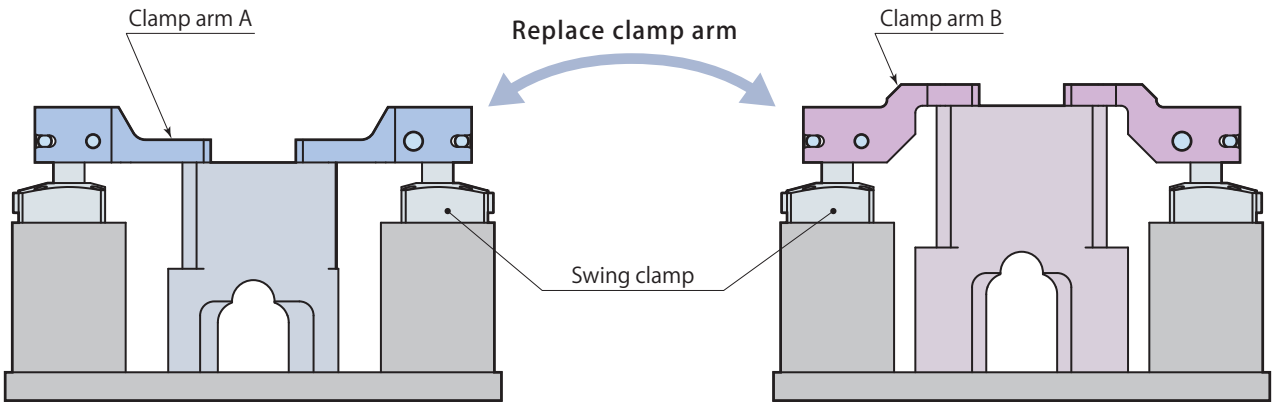

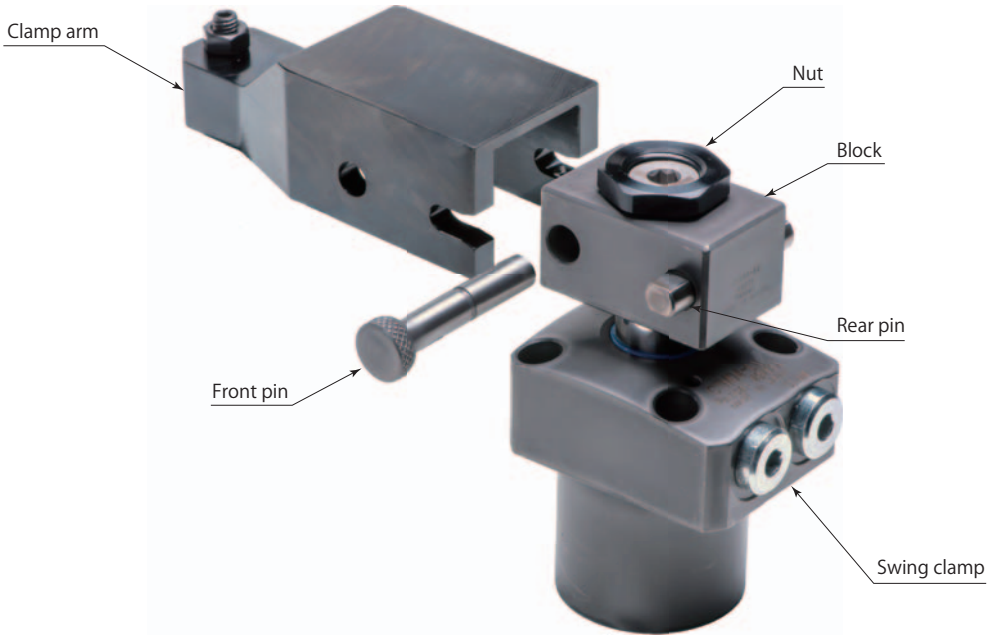

CTH□-BQ	Quick arm change	Option

Quick arm change

Size

04
05
06
10
16

CTH — **BQ** : Quick arm change

indicates made to order.

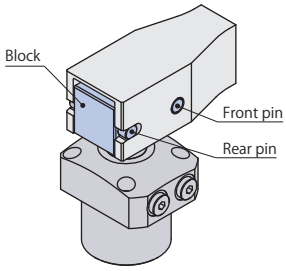

Clamp arm mounting

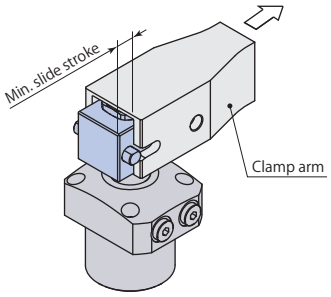

Clamp arm dismounting

Pull the pin out and slide the clamp arm to the front of the clamp so the arm can be removed.

Dimensions

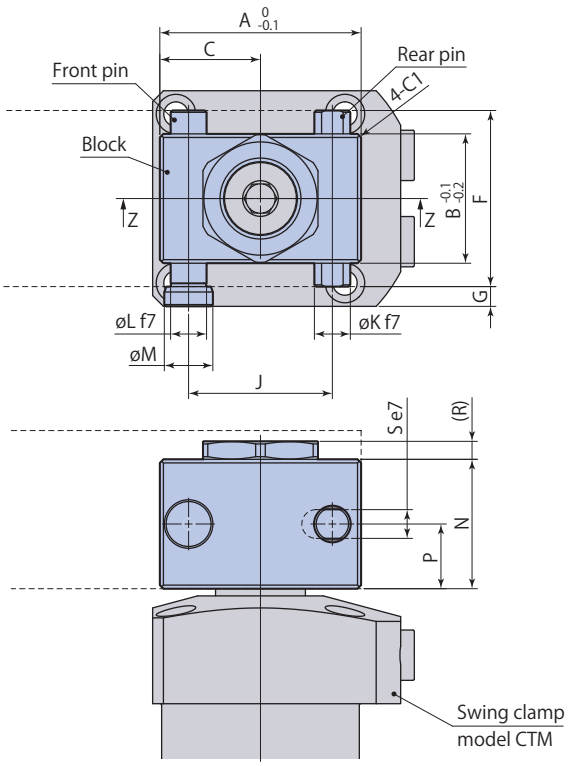

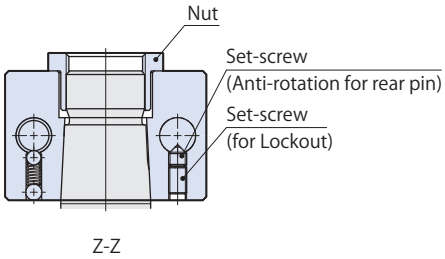

Clamp arm mounting details

Recommended material：S45C (HB201–269)

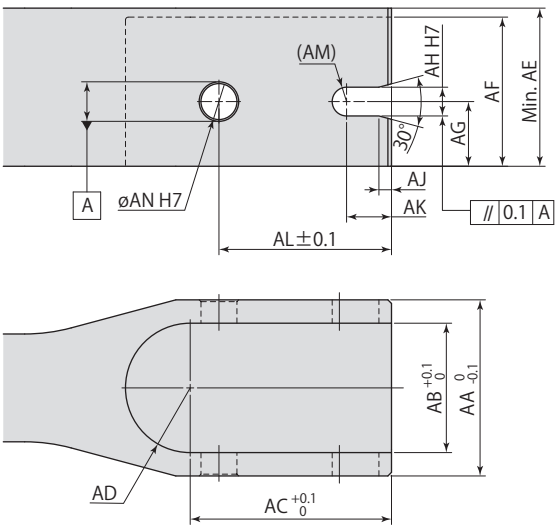

mm

Quick arm change	CTH04-BQ	CTH05-BQ	CTH06-BQ	CTH10-BQ	CTH16-BQ
Applicable swing clamp	CTM04	CTM05	CTM06	CTM10	CTM16
A	42	48	56	67	80
B	27	33.5	36	45.5	50.5
C	21	24	28	33.5	40
F	40	45	49	59	72
G	5.5	5.5	5.5	5.5	9
J	29	34	40	50	56
øK	$8^{-0.013}_{-0.028}$	$10^{-0.013}_{-0.028}$	$10^{-0.013}_{-0.028}$	$10^{-0.013}_{-0.028}$	$16^{-0.016}_{-0.034}$
øL	$8^{-0.013}_{-0.028}$	$10^{-0.013}_{-0.028}$	$10^{-0.013}_{-0.028}$	$10^{-0.013}_{-0.028}$	$16^{-0.016}_{-0.034}$
øM	11.5	13.5	13.5	13.5	21
N	23	30	36	36	50
P	11.5	15	18	18	25
R	5	5	5	5	7
S (width across flats)	$6^{-0.020}_{-0.032}$	$8^{-0.025}_{-0.040}$	$8^{-0.025}_{-0.040}$	$8^{-0.025}_{-0.040}$	$14^{-0.032}_{-0.050}$
Min. slide stroke	10.5	12	13	13.5	20

- Refer to **pages →12–67** for model CTM for other specifications and dimensions that are not shown in the diagram.
- Refer to performance table (**pages →14**, **15**) for the relation between hydraulic force and clamp arm length.
- A nut, block, front pin and a rear pin are included.
- Customers must arrange for the clamp arm.

mm

Quick arm change	CTH04-BQ	CTH05-BQ	CTH06-BQ	CTH10-BQ	CTH16-BQ
Applicable swing clamp	CTM04	CTM05	CTM06	CTM10	CTM16
AA	40	45	49	59	72
AB	27	33.5	36	45.5	50.5
AC	42	48	56	67	80
AD	R13.5	R16.75	R18	R22.75	R25.25
AE	32	39	44	44	62
AF	29	36	41.5	41.5	58
AG	11.5	15	18	18	25
AH	$6^{+0.012}_{0}$	$8^{+0.015}_{0}$	$8^{+0.015}_{0}$	$8^{+0.015}_{0}$	$14^{+0.018}_{0}$
AJ	2.5	3	3.5	4	6
AK	9.5	10.5	11.5	12	16.5
AL	35.5	41	48	58.5	68
AM	R3	R4	R4	R4	R7
øAN	$8^{+0.015}_{0}$	$10^{+0.015}_{0}$	$10^{+0.015}_{0}$	$10^{+0.015}_{0}$	$16^{+0.018}_{0}$

Table of contents

Structure, Hydraulic circuit diagram 84
Specifications, Piping 85
Performance table 86
Swing speed adjustment 87
Compact model **CTN** Dimensions 88
Mounting details 90
Clamp arm mounting details 91
Mounting & dismounting of clamp arm 92
Flow control valve **VCF** 94
Air bleeding valve **VCE** 96

Swing clamp

Single acting 7 MPa

model CTN

Single acting Swing clamp
model CTN06-L

Compact model

model **CTN□-□** JP PAT.

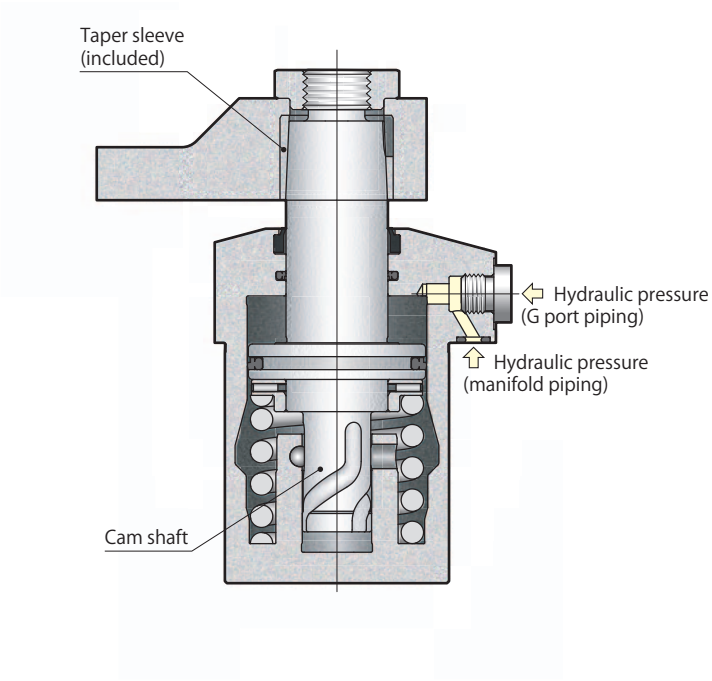

Hydraulic circuit diagram

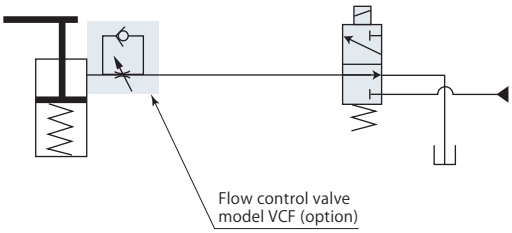

Use flow control valve for meter-in control.

Specifications page → 85
Dimensions page → 88
Mounting details page → 90

Specifications

CTN — Size: 02, 04, 05, 06, 10, 16

Swing direction (when clamping)

L : Counter-clockwise

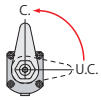

R : Clockwise

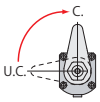

Contact Pascal for the details of variation codes (models) that are not described in the catalog.

Model			CTN02	CTN04	CTN05	CTN06	CTN10	CTN16
Cylinder force (hydraulic pressure 7MPa)*1		kN	2.3	3.3	4.4	5.8	8.1	12.1
Cylinder inner diameter		mm	27	32	38	44	52	63
Rod diameter		mm	15	18	22	25	30	35.5
Effective area (clamp)		cm^2	4.0	5.5	7.5	10.3	14.2	21.3
Swing angle			90°±3°					
Positioning pin groove position accuracy			±1°					
Repeated clamp positioning accuracy			±0.5°					
Full stroke		mm	12.5	13	14	16.5	18	21.5
90° swing stroke		mm	4.5	5	6	6.5	8	9.5
Clamp stroke		mm	8	8	8	10	10	12
Cylinder capacity (clamp)		cm^3	4.9	7.1	10.6	17.0	25.5	45.7
Return spring force	Unclamp	kN	0.35	0.42	0.59	0.82	1.03	1.54
	Clamp stroke central position	kN	0.45	0.54	0.85	1.38	1.82	2.80
	Clamp end	kN	0.50	0.60	0.95	1.63	2.13	3.29
Recommended piping inner diameter*2		mm	ø6	ø6	ø6	ø6	ø8	ø8
Mass		kg	0.6	0.8	1.2	1.7	2.5	3.8
Recommended tightening torque of mounting screws*3		N·m	3.5	7	7	12	12	29
Recommended tightening torque of nut		N·m	7.5	14	40	50	74	116

- Pressure range：2.5–7 MPa
- Proof pressure：10.5 MPa
- Operating temperature：0–70 ℃
- Fluid used：General mineral based hydraulic oil (ISO-VG32 equivalent)
- Seals are resistant to chlorine-based cutting fluid. (not thermal resistant specification)

*1：This is value for central position of clamp stroke.

*2：Care must be taken when numerous clamps are used or when hydraulic piping is long. *3：ISO R898 class 12.9

Manifold piping and G port piping are available.

Manifold piping

When choosing manifold piping, a flow control valve (model VCF) and an air bleeding valve (model VCE) are mountable on the G ports of the clamp.

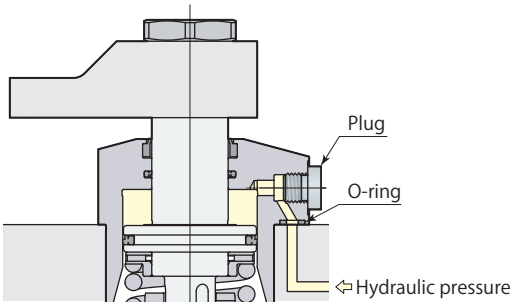

G port piping

Remove plug when choosing G port piping. (O-ring must be used.) Refer to **page →220** for details on G port piping flareless fitting. The flow control valve and the air bleeding valve should be installed in the middle of oil path.

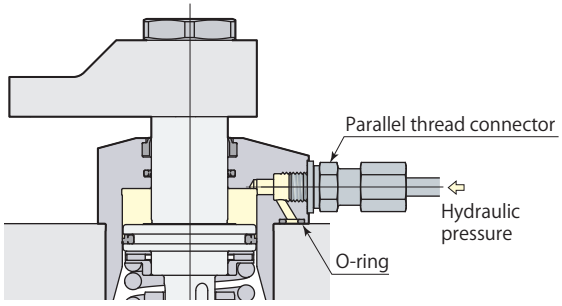

CTN□-□ Single acting Swing clamp 7MPa Single acting

Performance table

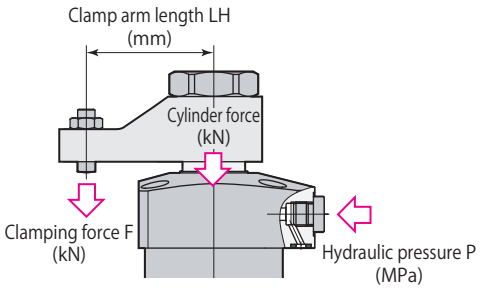

Clamping force varies depending on the clamp arm length (LH) and hydraulic pressure (P).

Clamping force calculation formula

F＝(P-Coefficient 1)/(Coefficient 2＋Coefficient 3×LH)

F：Clamping force　P：Hydraulic pressure　LH：Clamp arm length

CTN06 with clamp arm length (LH) = 50 mm at hydraulic pressure of 7 MPa, Clamping force F is calculated by

(7-1.34)/(0.971+0.00444×50)＝4.7 kN

Do not use the clamp in the nonusable range. It may cause damage to the cylinder and rod.

model CTN02 Clamping force F=(P-1.15)/(2.53+0.014×LH)

Hydraulic pressure MPa	Cylinder force kN	Clamping force kN / Clamp arm length LH mm								Max. arm length Max. LH mm
		25	30	40	50	60	80	100	120	
7	2.3	2.0	2.0	1.9	1.8					53
6.5	2.1	1.9	1.8	1.7	1.7	1.6	Nonusable range			60
6	1.9	1.7	1.6	1.6	1.5	1.4				69
5.5	1.7	1.5	1.5	1.4	1.3	1.3	1.2			81
5	1.5	1.3	1.3	1.2	1.2	1.1	1.1			98
4.5	1.3	1.2	1.1	1.1	1.0	1.0	0.9	0.9	0.8	123
4	1.1	1.0	1.0	0.9	0.9	0.8	0.8	0.7	0.7	↑
3.5	0.9	0.8	0.8	0.8	0.7	0.7	0.6	0.6	0.6	↑
3	0.7	0.6	0.6	0.6	0.6	0.5	0.5	0.5	0.4	↑
2.5	0.5	0.5	0.5	0.4	0.4	0.4	0.4	0.3	0.3	123

model CTN04 Clamping force F=(P-0.986)/(1.82+0.00974×LH)

Hydraulic pressure MPa	Cylinder force kN	Clamping force kN / Clamp arm length LH mm								Max. arm length Max. LH mm
		40	50	60	70	80	100	120	140	
7	3.3	2.7	2.6	2.5						68
6.5	3.0	2.5	2.4	2.3	2.2		Nonusable range			77
6	2.8	2.3	2.2	2.1	2.0	1.9				89
5.5	2.5	2.0	2.0	1.9	1.8	1.7	1.6			104
5	2.2	1.8	1.7	1.7	1.6	1.5	1.4	1.3		127
4.5	1.9	1.6	1.5	1.5	1.4	1.4	1.3	1.2	1.1	162
4	1.7	1.4	1.3	1.3	1.2	1.2	1.1	1.0	0.9	↑
3.5	1.4	1.1	1.1	1.0	1.0	1.0	0.9	0.8	0.8	↑
3	1.1	0.9	0.9	0.8	0.8	0.8	0.7	0.7	0.6	↑
2.5	0.8	0.7	0.7	0.6	0.6	0.6	0.5	0.5	0.5	162

model CTN05 Clamping force F=(P-1.12)/(1.33+0.00663×LH)

Hydraulic pressure MPa	Cylinder force kN	Clamping force kN / Clamp arm length LH mm								Max. arm length Max. LH mm
		50	60	80	100	120	140	160	180	
7	4.4	3.5	3.4	3.2						84
6.5	4.0	3.2	3.1	2.9						96
6	3.7	2.9	2.8	2.6	2.4	Nonusable range				111
5.5	3.3	2.6	2.5	2.4	2.2	2.1				133
5	2.9	2.3	2.2	2.1	1.9	1.8	1.7	1.6		164
4.5	2.5	2.0	2.0	1.8	1.7	1.6	1.5	1.4	1.3	214
4	2.2	1.7	1.7	1.5	1.4	1.4	1.3	1.2	1.1	↑
3.5	1.8	1.4	1.4	1.3	1.2	1.1	1.1	1.0	0.9	↑
3	1.4	1.1	1.1	1.0	0.9	0.9	0.8	0.8	0.7	↑
2.5	1.0	0.8	0.8	0.7	0.7	0.6	0.6	0.6	0.5	214

model CTN06 Clamping force F=(P-1.34)/(0.971+0.00444×LH)

Hydraulic pressure MPa	Cylinder force kN	Clamping force kN / Clamp arm length LH mm								Max. arm length Max. LH mm
		50	60	80	100	120	140	160	180	
7	5.8	4.7	4.6							69
6.5	5.3	4.3	4.2							78
6	4.8	3.9	3.8	3.5	Nonusable range					90
5.5	4.3	3.5	3.4	3.1	2.9					106
5	3.8	3.1	3.0	2.8	2.6	2.4				128
4.5	3.3	2.6	2.6	2.4	2.2	2.1	2.0	1.9		164
4	2.7	2.2	2.1	2.0	1.9	1.8	1.7	1.6	1.5	227
3.5	2.2	1.8	1.7	1.6	1.5	1.4	1.4	1.3	1.2	↑
3	1.7	1.4	1.3	1.3	1.2	1.1	1.0	1.0	0.9	↑
2.5	1.2	1.0	0.9	0.9	0.8	0.8	0.7	0.7	0.7	227

model CTN10 Clamping force F=(P-1.29)/(0.706+0.00298×LH)

Hydraulic pressure MPa	Cylinder force kN	Clamping force kN / Clamp arm length LH mm								Max. arm length Max. LH mm
		60	80	100	120	140	160	180	200	
7	8.1	6.5	6.0							86
6.5	7.4	5.9	5.5							97
6	6.7	5.3	5.0	4.7	Nonusable range					112
5.5	6.0	4.8	4.5	4.2	4.0					133
5	5.3	4.2	3.9	3.7	3.5	3.3	3.1			163
4.5	4.5	3.6	3.4	3.2	3.0	2.9	2.7	2.6	2.5	212
4	3.8	3.1	2.9	2.7	2.5	2.4	2.3	2.2	2.1	↑
3.5	3.1	2.5	2.3	2.2	2.1	2.0	1.9	1.8	1.7	↑
3	2.4	1.9	1.8	1.7	1.6	1.5	1.4	1.4	1.3	↑
2.5	1.7	1.4	1.3	1.2	1.1	1.1	1.0	1.0	0.9	212

model CTN16 Clamping force F=(P-1.32)/(0.47+0.00171×LH)

Hydraulic pressure MPa	Cylinder force kN	Clamping force kN / Clamp arm length LH mm								Max. arm length Max. LH mm
		60	80	100	120	140	160	180	200	
7	12.1	9.9	9.4	8.9						102
6.5	11.0	9.0	8.5	8.1		Nonusable range				116
6	10.0	8.2	7.7	7.3	6.9					134
5.5	8.9	7.3	6.9	6.5	6.2	5.9				159
5	7.8	6.4	6.1	5.7	5.5	5.2	4.9	4.7		197
4.5	6.8	5.6	5.2	5.0	4.7	4.5	4.3	4.1	3.9	256
4	5.7	4.7	4.4	4.2	4.0	3.8	3.6	3.4	3.3	↑
3.5	4.6	3.8	3.6	3.4	3.2	3.1	2.9	2.8	2.7	↑
3	3.6	2.9	2.8	2.6	2.5	2.4	2.3	2.2	2.1	↑
2.5	2.5	2.1	1.9	1.8	1.7	1.7	1.6	1.5	1.5	256

Swing speed adjustment

Swing time is restricted by the mass and length of the clamp arm (moment of inertia) since the 90° swing action impacts the cam shaft.

1.Calculate the moment of inertia according to the arm length and mass.

2.Adjust swing speed with flow control valve to ensure that 90° swing time of the clamp arm is greater than the shortest swing time in the graph shown below.

● The cam groove may be damaged in case the swing speed is set at the nonusable range in the graph.

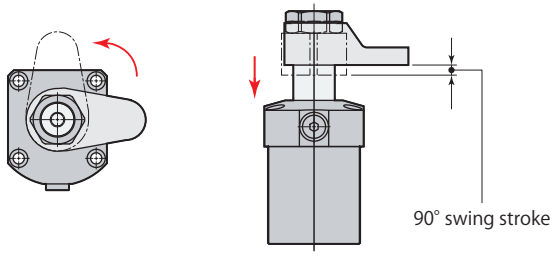

Example of calculation for moment of inertia

$$I = \frac{1}{12} m_1(4A_1^2+B^2)+\frac{1}{12} m_2(4A_2^2+B^2)$$

I : Moment of inertia (kg·m²)

m: Mass (kg)

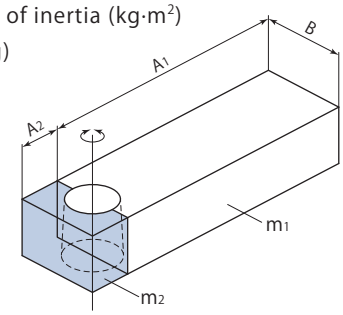

model CTN02

Shortest swing time calculation formula $t=\sqrt{\frac{I}{0.0134}}$

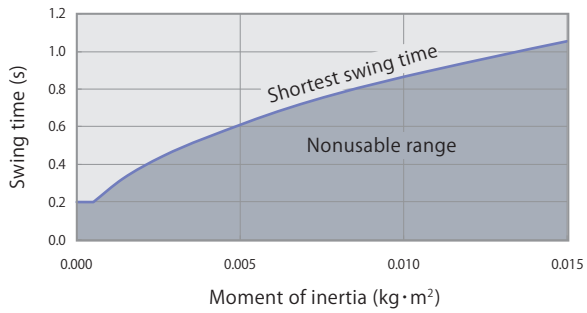

model CTN04

Shortest swing time calculation formula $t=\sqrt{\frac{I}{0.0153}}$

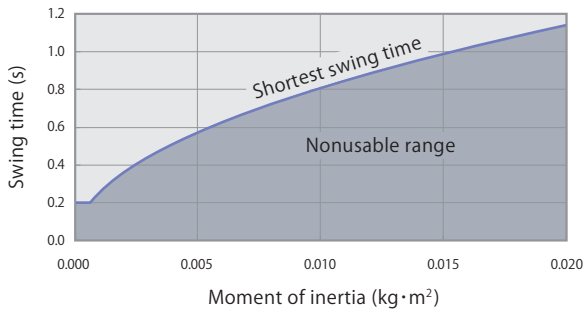

model CTN05

Shortest swing time calculation formula $t=\sqrt{\frac{I}{0.0190}}$

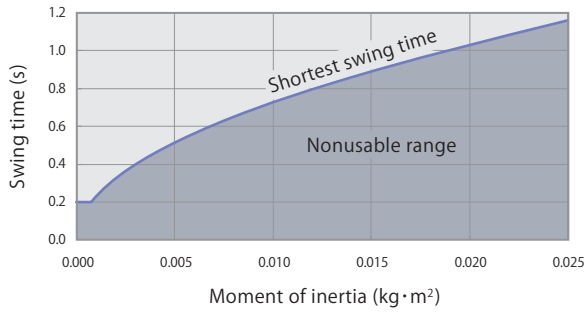

model CTN06

Shortest swing time calculation formula $t=\sqrt{\frac{I}{0.0378}}$

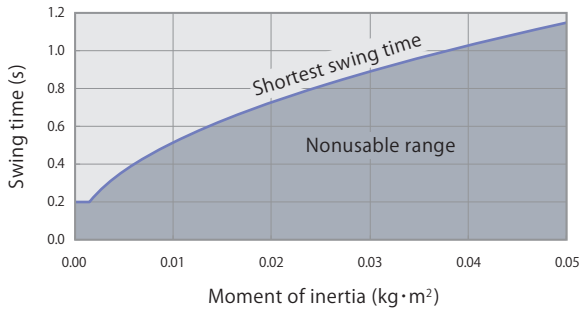

model CTN10

Shortest swing time calculation formula $t=\sqrt{\frac{I}{0.0450}}$

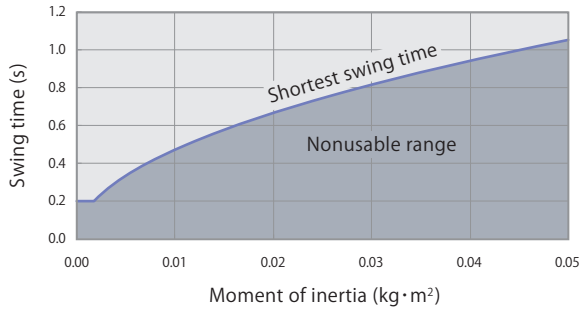

model CTN16

Shortest swing time calculation formula $t=\sqrt{\frac{I}{0.0905}}$

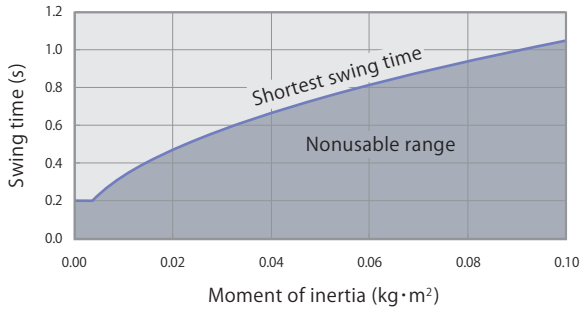

CTN□-□	Single acting Swing clamp	7MPa Single acting

Dimensions

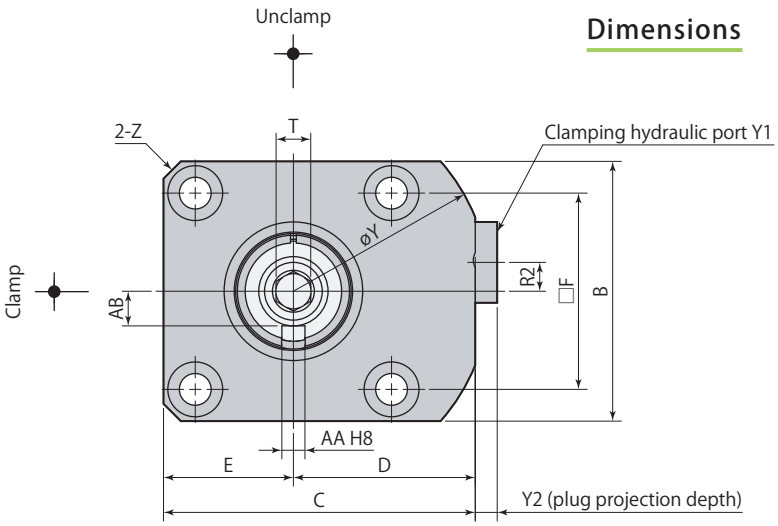

This diagram indicates the arm positioning pin groove at unclamped condition.

Swing direction L (counter-clockwise)

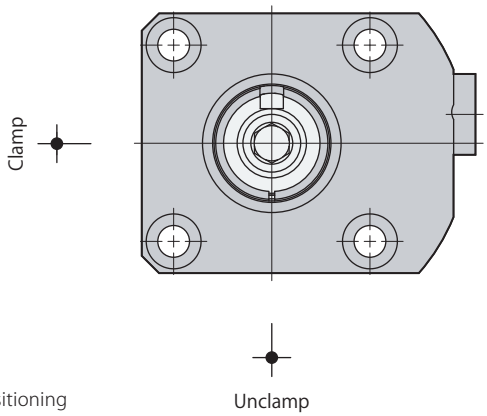

Swing direction R (clockwise)

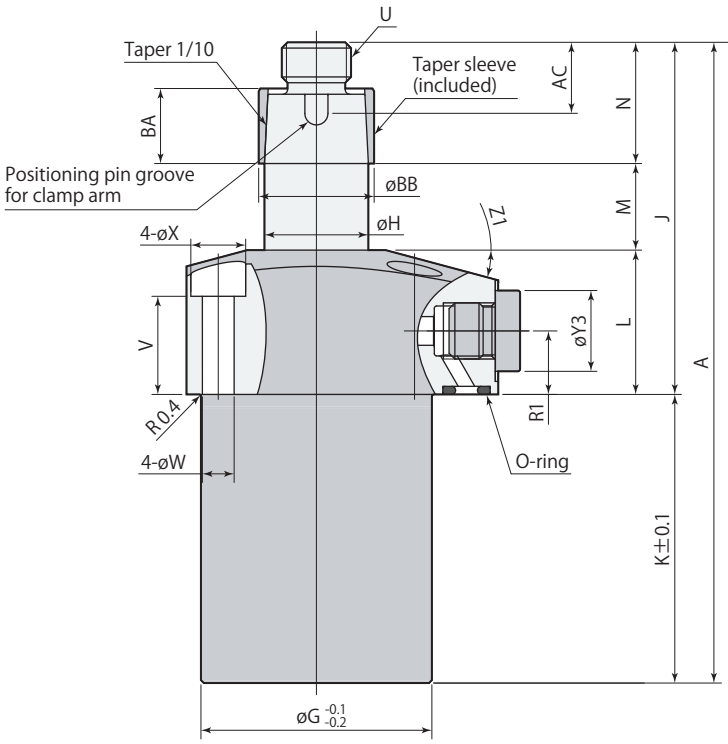

Unclamp

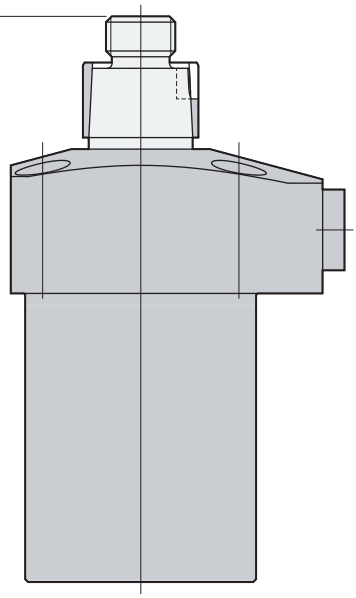

Stroke end

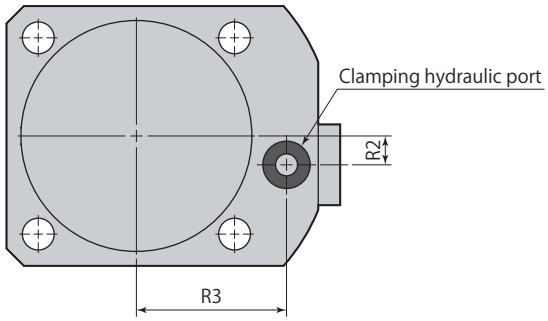

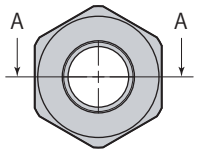

Hex nut for arm mount

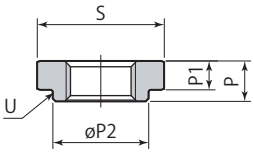

A-A

- Hex nut for arm mount, taper sleeve are included.
- Clamp arm, positioning pin and mounting screws are not included.

mm

Model		CTN02-□	CTN04-□	CTN05-□	CTN06-□	CTN10-□	CTN16-□
A		103.5	111	121	137.5	145	171.5
B		40	45	51	60	70	80
C		49	54	61	69	81	92
D		29	31.5	35.5	39	46	52
E		20	22.5	25.5	30	35	40
F		31.4	34	40	47	55	63
øG		36	40	48	55	65	75
øH		15	18	22	25	30	35.5
J		55.5	61	69	78.5	82	100.5
K		48	50	52	59	63	71
L		25	25	28	28	30	37
M		14.5	15	16	18.5	20	23.5
N		16	21	25	32	32	40
P		5.8	7	9	10	10	12
P1		4	5	6	7	7	8
øP2		13.8	16.6	20.5	22.9	27.9	32.8
R1		11	11	13	12	14.5	18
R2	G port position	5	5	0	0	15	16
	Manifold port position					0	0
R3		23.5	26	30	33.5	39.5	45
S (nut width across flats)		19	22	24	30	36	41
T (hex socket)		5	6	8	8	10	10
U		M10×1	M12×1.5	M16×1.5	M18×1.5	M22×1.5	M28×1.5
V		18	17	18.5	17	18	22
øW		4.5	5.5	5.5	6.8	6.8	9
øX		7.5	9.5	9.5	11	11	14
øY		63	68	73	80	106	116
Y1		G1/8	G1/8	G1/8	G1/8	G1/4	G1/4
Y2		3.8	3.8	3.8	3.8	4.8	4.8
øY3		14	14	14	14	19	19
Z		C2	C3	C3	(ø80)	C4	C5
Z1		15°	15°	15°	15°	12°	12°
O-ring (fluorocarbon hardness Hs90)		P5	P5	P5	P5	P7	P7
AA		$3^{+0.018}_{0}$	$4^{+0.018}_{0}$	$4^{+0.018}_{0}$	$4^{+0.018}_{0}$	$6^{+0.018}_{0}$	$6^{+0.018}_{0}$
AB		5	6	8	9	11	14
AC		9.5	12.3	14.3	15.3	16.5	18.5
BA		9.5	13	15	21	21	27
øBB		17	20	25	28	34	40
Flow control valve (meter-in)*		VCF01S	VCF01S	VCF01S	VCF01S	VCF02	VCF02
Air bleeding valve*		VCE01	VCE01	VCE01	VCE01	VCE02	VCE02

*: Select the right model of VCF and VCE according to the size of the clamp.

Refer to each page for the details of options.

● Flow control valve **page →94** ● Air bleeding valve **page →96**

Mounting details

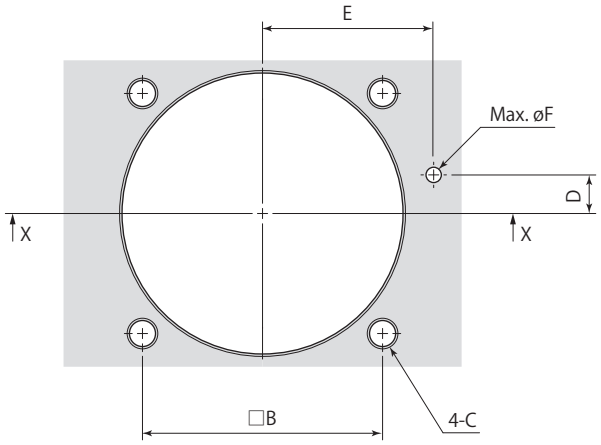

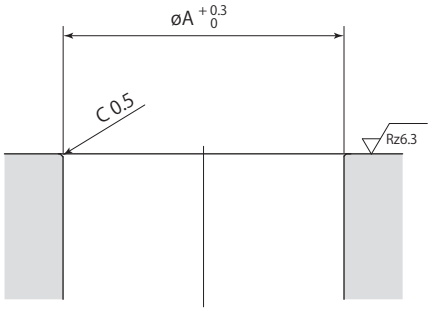

X-X

Rz: ISO4287(1997)

mm

Model	CTN02-□	CTN04-□	CTN05-□	CTN06-□	CTN10-□	CTN16-□
øA	36	40	48	55	65	75
B	31.4	34	40	47	55	63
C	M4	M5	M5	M6	M6	M8
D	5	5	0	0	0	0
E	23.5	26	30	33.5	39.5	45
øF	3	3	3	3	5	5

Clamp arm mounting details

(Using taper sleeve)

Clamp arm is not included. Manufacture a clamp arm with the dimensions shown in the table below.

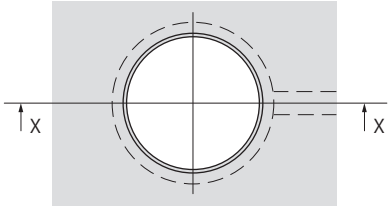

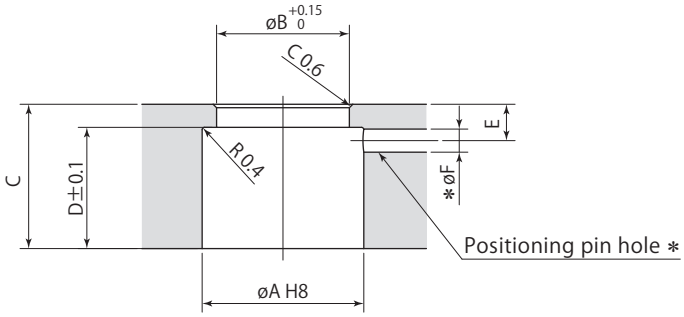

X-X

∗: No need to machine the pin hole (øF) unless positioning pin is used for the arm.
The positioning pin enables a clamp arm to locate on the clamp firmly and easily.

mm

Swing clamp	CTN02	CTN04	CTN05	CTN06	CTN10	CTN16
øA	17 +0.027 0	20 +0.033 0	25 +0.033 0	28 +0.033 0	34 +0.039 0	40 +0.039 0
øB	13.9	16.7	20.6	23	28	32.9
C	12	16	19	25	25	32
D	9.5	13	15	21	21	27
E	4.3	5.3	6.3	6.3	7.5	8.5
øF (pin hole diameter)	3	4	4	4	6	6

Mounting & dismounting of clamp arm

- Swing clamp may be damaged if excessive torque is applied to piston rod, since structure is intended for swinging using cam mechanism with lead grooves. Follow instructions shown below to prevent excessive torque from being applied on piston rod when mounting or dismounting clamp arm.
- Be sure to tighten locknut with recommended tightening torque. If the tightening torque is insufficient, clamp arm may slip during operation.

Model		CTM03	CTM04	CTM05	CTM06	CTM10	CTM16
Recommended tightening torque of locknut	N·m	22	35	60	100	155	260

Model		CTN02	CTN04	CTN05	CTN06	CTN10	CTN16
Recommended tightening torque of locknut	N·m	7.5	14	40	50	74	116

Model		CTU01 CTT01	CTU02 CTT02	CTU04 CTT04	CTU06 CTT06	CTU10 CTT10	CTU16 CTT16	CTU25 CTT25
Recommended tightening torque of locknut	N·m	12	26	51	60	86	120	180

Mounting of clamp arm

ⓐ Fix the clamp arm in a vise, then set the clamp body and clamp arm at the desired orientation, and tighten locknut with a wrench.

ⓑ For clamps that are mounted on jig, set clamp arm at desired orientation as shown in diagram below. Insert a hex wrench to hex socket at tip section of piston rod to hold it and tighten locknut with a wrench.

Dismounting of clamp arm

① Insert hex wrench to hex socket at tip section of piston rod to ensure that piston rod is held in place, then loosen locknut with wrench.

② After dismounting the locknut, pull out clamp arm using gear puller. A flat saddle type of gear puller should be used when removing an arm not to enlarge the hole on the tip of the piston rod. In addition, be careful not to rotate the rod when removing the arm.

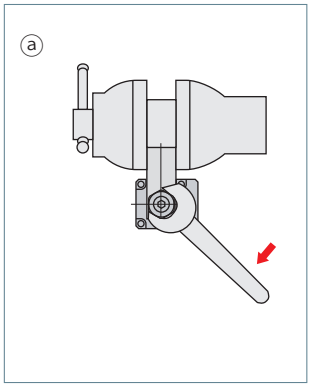

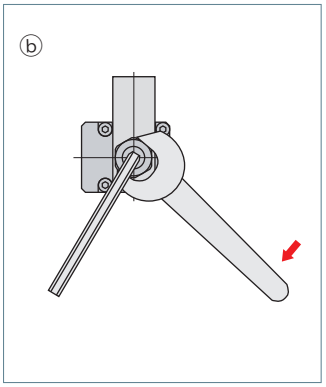

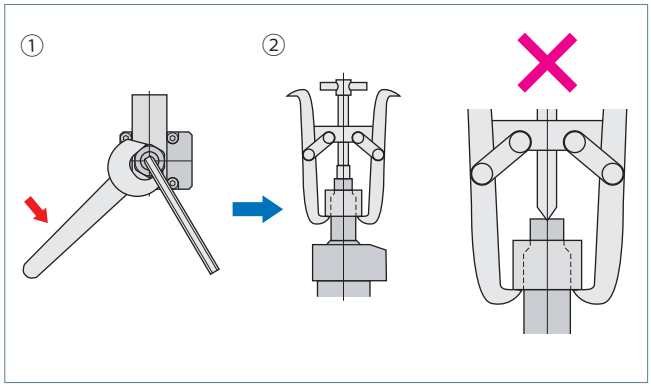

VCF□-□	Flow control valve	Option

Specifications

(Nil) : Meter-in

Body color : Silver

O : Meter-out

Body color : Black

VCF

G port size

- 01S : G1/8
- 01 : G1/8
- 02 : G1/4
- 03 : G3/8

–

Control method

- (Nil) : Meter-in

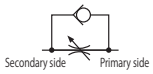

- O : Meter-out

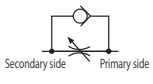

Model		Meter-in				Meter-out			
		VCF01S	VCF01	VCF02	VCF03	VCF01S-O	VCF01-O	VCF02-O	VCF03-O
G port size		G1/8	G1/8	G1/4	G3/8	G1/8	G1/8	G1/4	G3/8
Cracking pressure	MPa	0.04	0.04	0.04	0.04	0.1	0.1	0.1	0.1
Orifice area	mm^2	4.9	4.9	9.6	19.6	3.1	3.1	6.2	12.6
Recommended tightening torque	N·m	10	10	30	35	10	10	30	35
Mass	kg	0.011	0.013	0.024	0.038	0.011	0.013	0.024	0.038

- Pressure range : 0.5–7 MPa
- Proof pressure : 10.5 MPa
- Operating temperature : 0–70 ℃
- Fluid used : General mineral based hydraulic oil (ISO-VG32 equivalent)

Dimensions

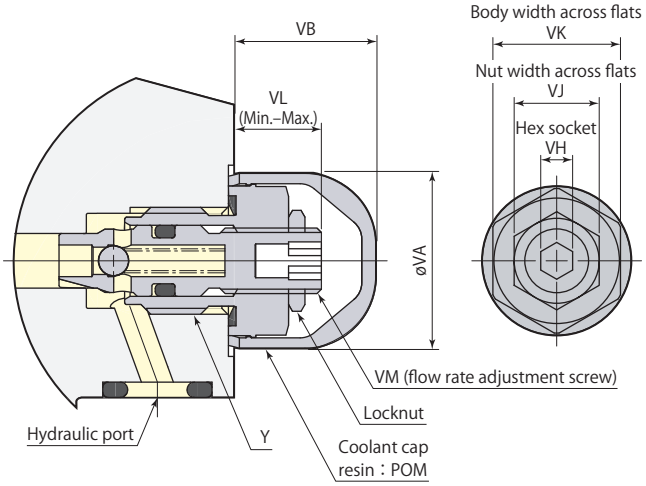

mm

Model	VCF01S VCF01S-O	VCF01 VCF01-O	VCF02 VCF02-O	VCF03 VCF03-O
Y	G1/8	G1/8	G1/4	G3/8
øVA	16	16	21	24
VB	13	13	13	14
VH	3	3	5	6
VJ	8	8	10	14
VK	12	12	17	19
VL	8–11	7–11	7.5–11.5	8.5–12.5
Adjustment screw number of turns	4 rotations	5.3 rotations	5.3 rotations	5.3 rotations
VM	M6×0.75	M6×0.75	M8×0.75	M10×0.75

- Use a closed wrench or socket wrench for mounting and dismounting.
- Flow control valve can be mounted on hydraulic port (G port) when manifold piping.
- Adjust flow rate without hydraulic pressure. Conducting adjustments with hydraulic pressure may result in damaging seal.
- Diagram above indicates mounting for meter-in (VCF□).
- VCF is shipped with the valve fully open. Adjust the flow rate by loosening the screws after it is screwed in to close totally. Tighten the locknut after adjustment is completed.

Applicable clamp and work support

Model	VCF01S	VCF01	VCF02	VCF03
Swing clamp (double acting)	CTM03, 04, 05, 06 CTP04, 05, 06	CTM10 CTU01, 02, 04, 06	CTM16 CTU10, 16	CTU25
Swing clamp (single acting)*	CTN02, 04, 05, 06	CTT01, 02, 04, 06	CTN10, 16 CTT10, 16	CTT25
Swivel clamp (double acting)*	CTS04	CTS06	CTS10, 16	–
Link clamp (double acting)	CLM03, 04 CLP04, 05, 06	CLM05, 06, 10 CLU02, 04, 06	CLM16 CLU10, 16	CLU25
Link clamp (single acting)*	CLN04	CLN05, 06 CLT02, 04, 06	CLN10, 16 CLT10, 16	CLT25
Work lift cylinder	CNB01	CNB02, 04	–	–
Push, pull cylinder	–	CNA02, 04, 06	CNA10, 16	CNA25
Work support*	CSU CSP-D(CSN, CSY)	–	–	–

*: Single acting swing clamp, swivel clamp, single acting link clamp and work support are meter-in only.

Mounting details

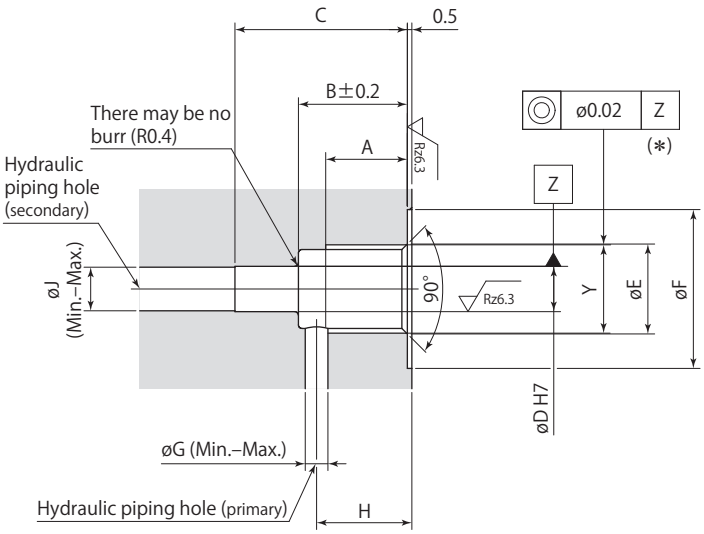

Rz: ISO4287(1997)

mm

Model	VCF01S VCF01S-O	VCF01 VCF01-O	VCF02 VCF02-O	VCF03 VCF03-O
A	9	9	13	13
B	11	13	18	19
C	15.5	17.5	22.5	23.5
øD	$5^{+0.012}_{0}$	$5^{+0.012}_{0}$	$6^{+0.012}_{0}$	$8^{+0.015}_{0}$
øE	9.9	9.9	13.3	16.8
øF	17.5	17.5	21.5	24.5
øG	1.5–2	2.5–3	3.5–5	5–6
H	9–10	9.5–11.5	14.5–15.5	15–16
øJ	2.5–5	2.5–5	3.5–6	5–8
Y	G1/8	G1/8	G1/4	G3/8

*: Concentricity is required when machining øD and Y-portion thread. Misalignment or machining defect may cause the trouble of installation and adjusting flow rate.

Mounting & dismounting of flow control valve, air bleeding valve

- When mounting or dismounting a flow control valve or air bleeding valve, be sure to set pressure within hydraulic circuit to 0 MPa before starting.
- When mounting a flow control valve or air bleeding valve, be sure to tighten it with the recommended tightening torque.
- When mounting a coolant cap (resin: POM), firmly press the body of cover. If it is not mounting properly, use a plastic mallet to tap it into place.
- When dismounting a coolant cap, use a sharp-pointed tool such as a precision screw driver by hooking the notched portion.

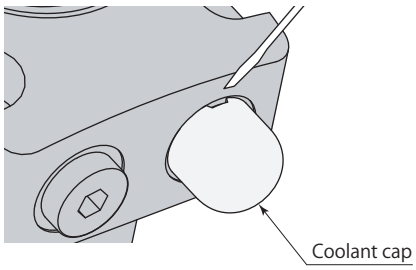

Mounting example

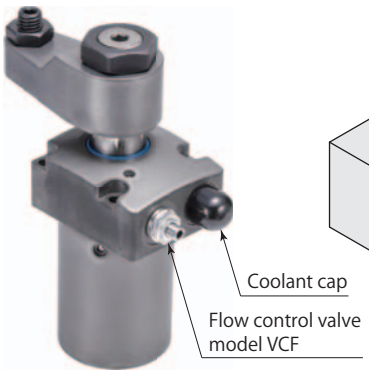

Cylinder mounting

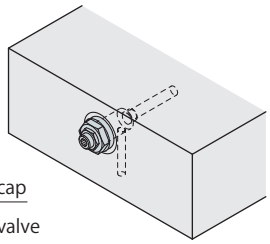

Pallet mounting

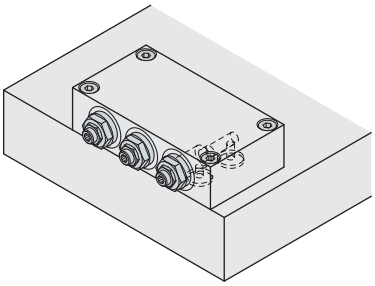

Block mounting ①

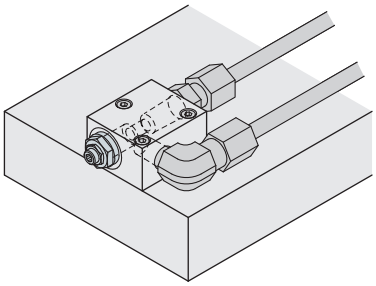

Block mounting ②

VCE□	Air bleeding valve	Option

Specifications

G port size

VCE	01	: G1/8
	02	: G1/4
	03	: G3/8

Model		VCE01	VCE02	VCE03
G port size		G1/8	G1/4	G3/8
Recommended tightening torque	N·m	10	30	35
Mass	kg	0.017	0.029	0.044
Pressure range	MPa	0–50		
Operating temperature	°C	0–70		
Fluid used		General mineral based hydraulic oil (ISO-VG32 equivalent)		

Dimensions

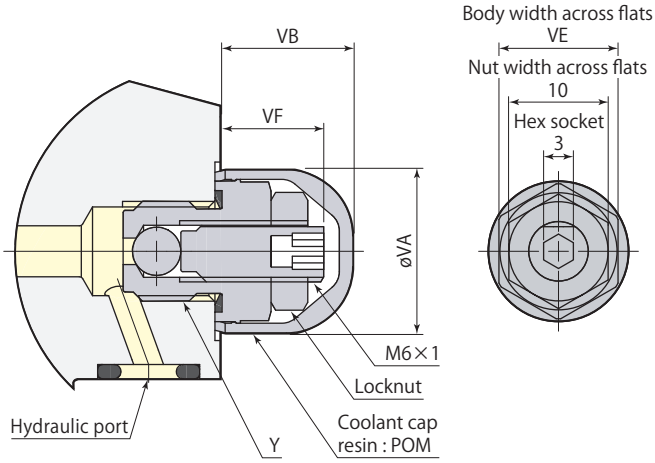

mm

Model	VCE01	VCE02	VCE03
A	9	13	13
B	10	14	14
øE	9.9	13.3	16.8
øF	17.5	21.5	24.5
Y	G1/8	G1/4	G3/8
øVA	16	21	24
VB	13	13	14
VE	12	17	19
VF	10.5	10.5	11.5

- Use a closed wrench or socket wrench for mounting and dismounting.
- Air bleeding valve can be mounted on hydraulic port (G port) when manifold piping.

Mounting details

Rz: ISO4287(1997)

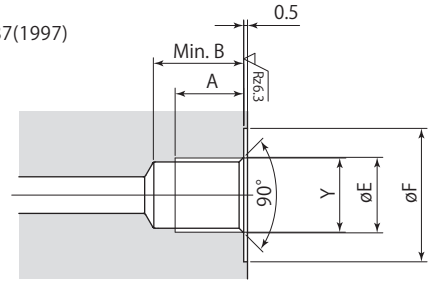

Applicable clamp and work support

Model	VCE01	VCE02	VCE03
Swing clamp (double acting)	CTM03, 04, 05, 06, 10 CTP04, 05, 06 CTU01, 02, 04, 06	CTM16 CTU10, 16	CTU25
Swing clamp (single acting)	CTN02, 04, 05, 06 CTT01, 02, 04, 06	CTN10, 16 CTT10, 16	CTT25
Swivel clamp (double acting)	CTS04, 06	CTS10, 16	–
Link clamp (double acting)	CLM03, 04, 05, 06, 10 CLP04, 05, 06 CLU02, 04, 06	CLM16 CLU10, 16	CLU25
Link clamp (single acting)	CLN04, 05, 06 CLT02, 04, 06	CLN10, 16 CLT10, 16	CLT25
Work lift cylinder	CNB01, 02, 04	–	–
Push, pull cylinder	CNA02, 04, 06	CNA10, 16	CNA25
Work support	CSU CST CSP-D(CSN, CSY, CSK)	–	–

Link clamp		model **CLM** Page →102	model **CLN** Page →142
Specifications		7MPa Double acting	7MPa Single acting
Features		Low profiled cylinder Built-in sensor model	Low profiled cylinder Built-in sensor model
Variations	3 point sensor model	CLM-T **Page →116**	—
	Clamp sensor model	CLM-C **Page →124**	—
	Unclamp sensor model	CLM-B **Page →132**	CLN-B **Page →154**
	Compact model (without sensor)	CLM-N **Page →136**	CLN-N **Page →158**
	Bottom piping specifications 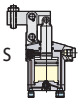	*	—
Option	Flow control valve	VCF **Page →164**	
	Air bleeding valve	VCE **Page →166**	

*：Contact Pascal for the details.

Super compact body

The significant downsizing is realized compared to the conventinal model.

Compact model
(without sensor)

Standard model
(without sensor)

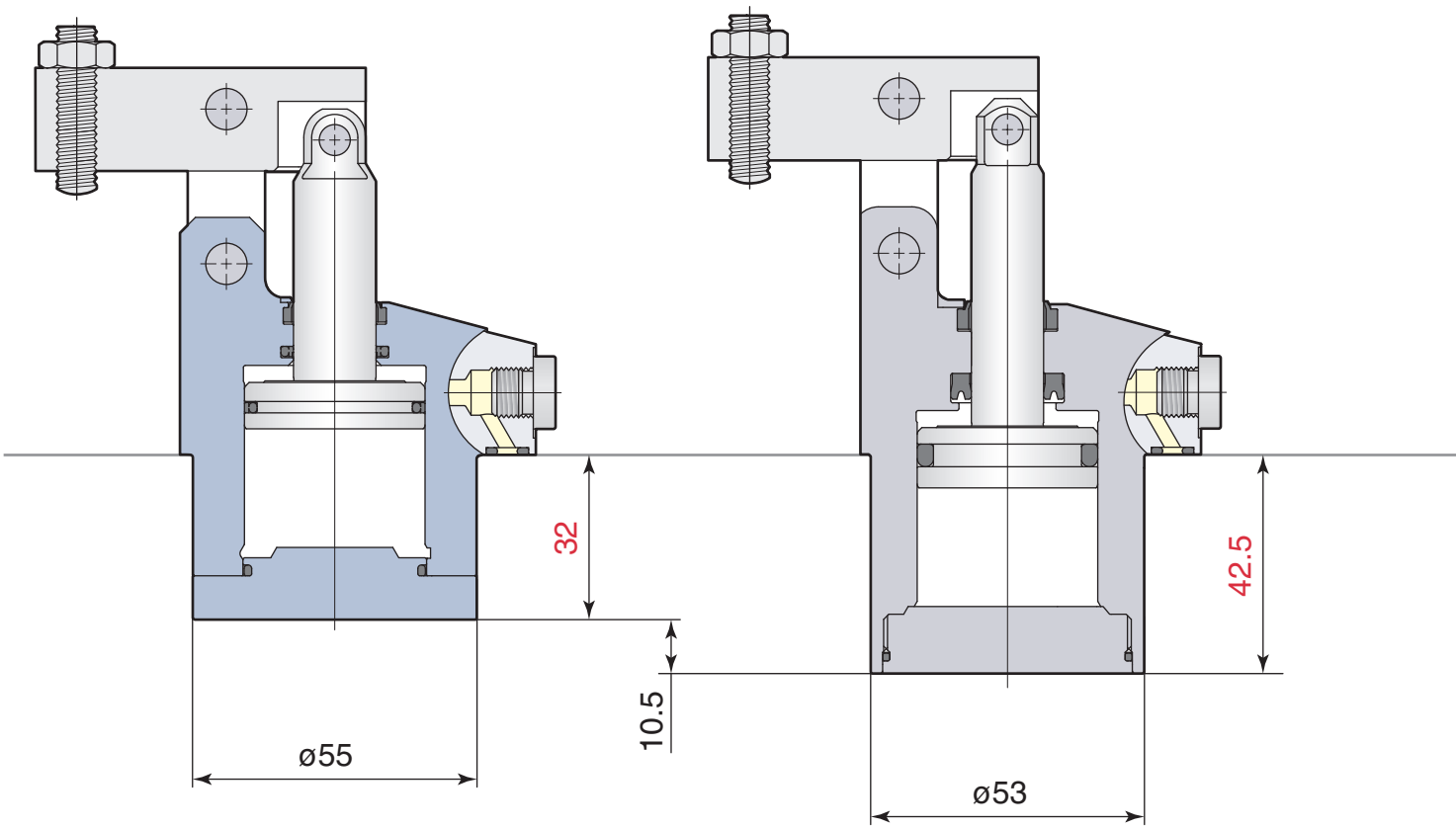

	model **CLM06-FN**	model **CLU06-F**
Cylinder force (at 7MPa)	6.7 kN	6.7 kN

Super compact body

Enables a jig to be compact and simple structure with an excellent sensor function

3 point sensor model

Clamp, Unclamp, Over clamp stroke (Incomplete clamp) detection

Air sensor model

Clamp, Unclamp detection

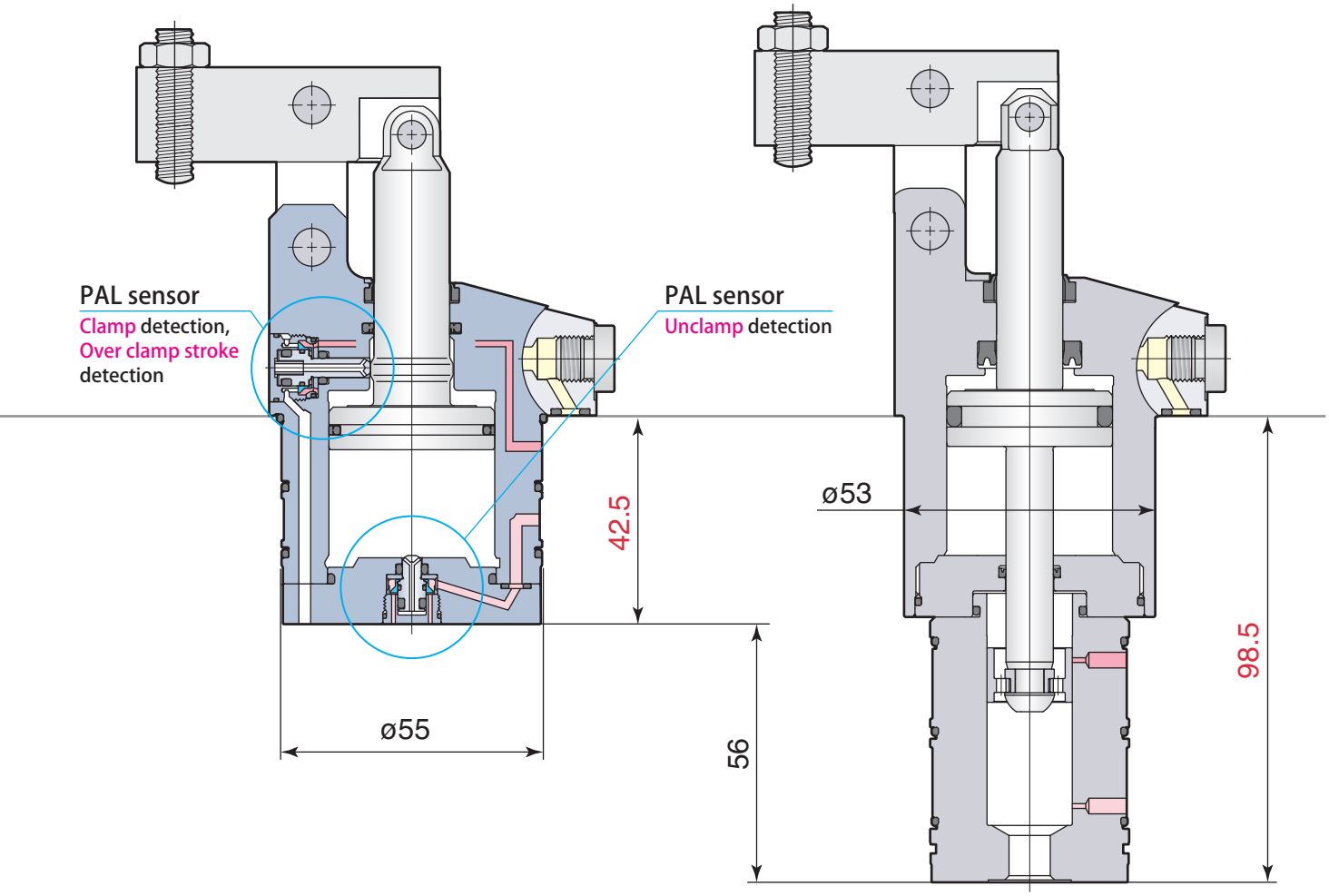

model CLM06-FT	model CLU06-FA
6.7 kN	6.2 kN

Table of contents

Features 104

Structure, Hydraulic and pneumatic circuit diagram 106

Specifications 108

Piping 109

Performance diagram, Performance table 110

3 point sensor model **CLM-T**

- PAL sensor function and structure 112
- Sensor signal detection 114
- **CLM-T** Dimensions 116
- Mounting details 118

Clamp sensor model **CLM-C**

- PAL sensor function and structure 120
- Sensor signal detection 122
- **CLM-C** Dimensions 124
- Mounting details 126

Unclamp sensor model **CLM-B**

- PAL sensor function and structure 129
- Sensor signal detection 130
- **CLM-B** Dimensions 132
- Mounting details 134

Compact model **CLM-N**

- **CLM-N** Dimensions 136
- Mounting details 138

Clamp arm mounting details 139

Clamp arm allowable eccentricity 140

Caution in use 163

Flow control valve **VCF** 164

Air bleeding valve **VCE** 166

Sensing Link clamp

Double acting 7 MPa

model CLM

3 point sensor model
model CLM06-FT

Clamp sensor model
model CLM06-FC

Unclamp sensor model
model CLM06-FB

Compact model
model CLM06-FN

Sensing Link clamp model CLM

The extremely small sensing clamp can detect the loading miss and setting miss of a workpiece firmly.

3 point sensor model

Clamp sensor model

Unclamp sensor model

- Sensor model can prevent tool breakage and defective machining due to incomplete clamp. (Figure 1)
- Unclamp PAL sensor moves along with the piston rod and can positively detect unclamping point, thereby enabling a high-speed production line by fully synchronizing operation with workpiece lifters.
- Built-in sensors enable a compact and simple jig.
- Unclamp detection failure due to the metal chips deposit on an independent external detector can be reduced. (Figure 2)

Figure 1

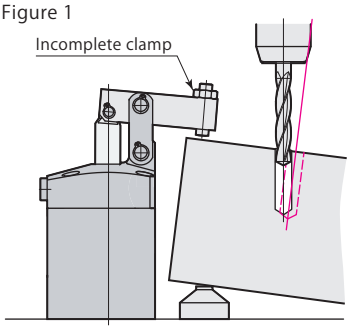

Machining failure due to incomplete clamp

Figure 2

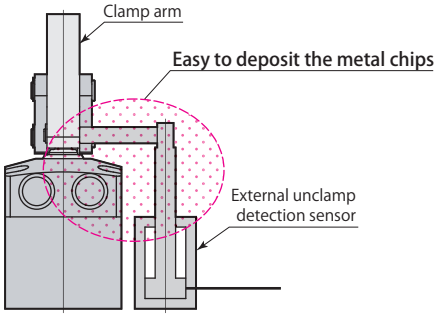

3 point sensor model

Clamp, Unclamp, Over clamp stroke (Incomplete clamp) detection

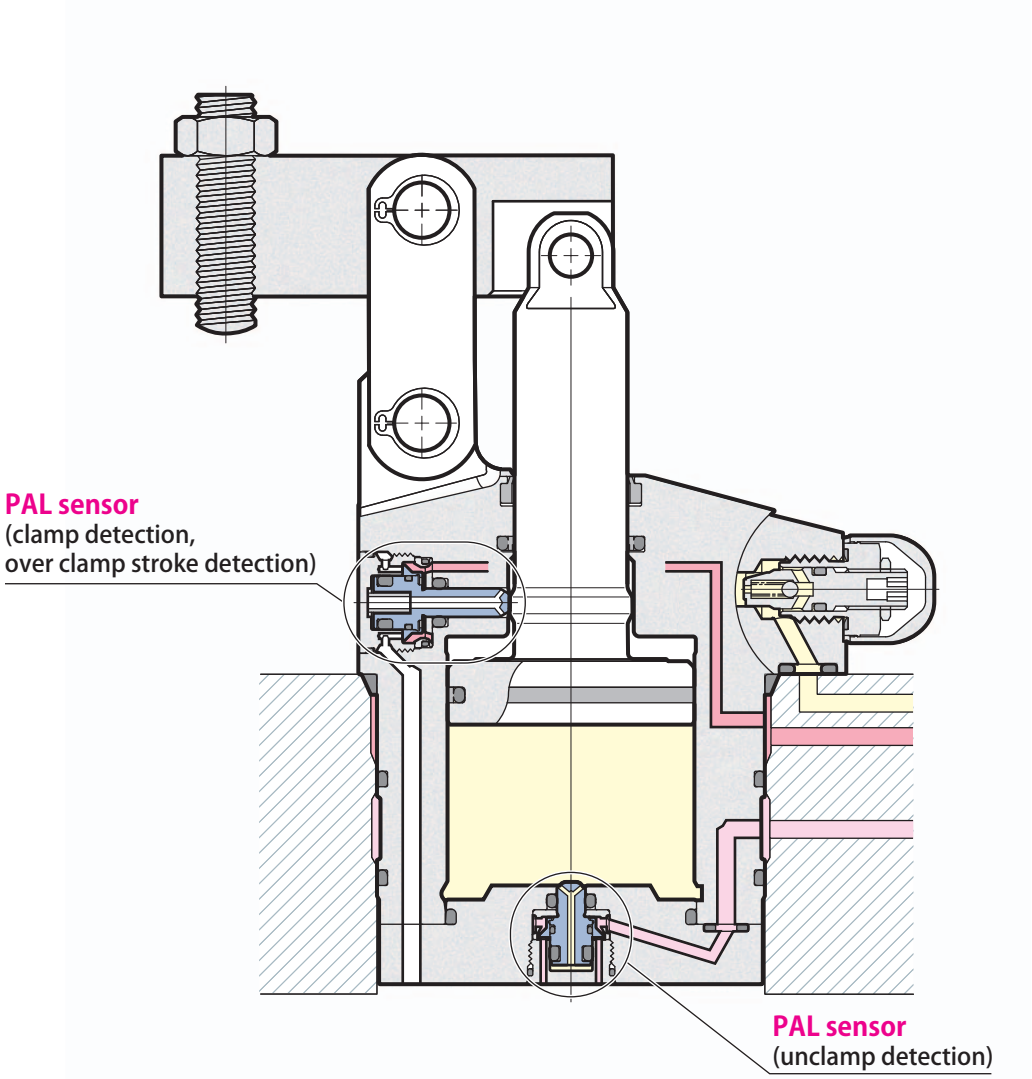

Clamp sensor model

Clamp, Over clamp stroke (Incomplete clamp) detection

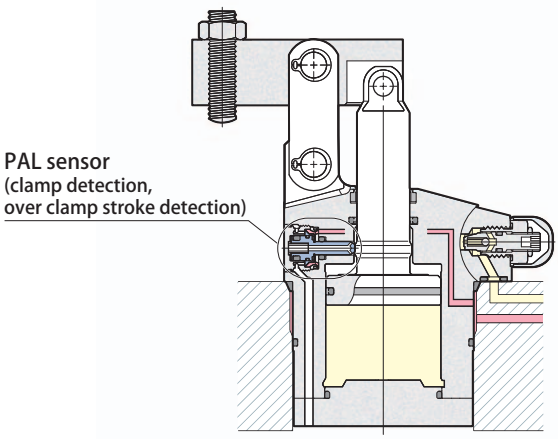

Unclamp sensor model

Unclamp detection

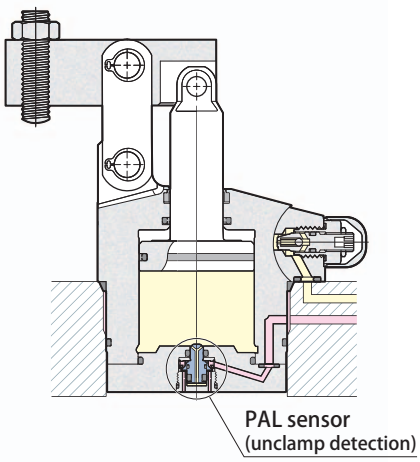

3 point sensor model T

Clamp, Unclamp, Over clamp stroke (Incomplete clamp) detection

model **CLM□-□T** PAT.

The 3 point sensor model can detect the status of clamp, unclamp and over clamp stroke with just 2 circuits of air.

Refer to **pages →112–115** for the details.

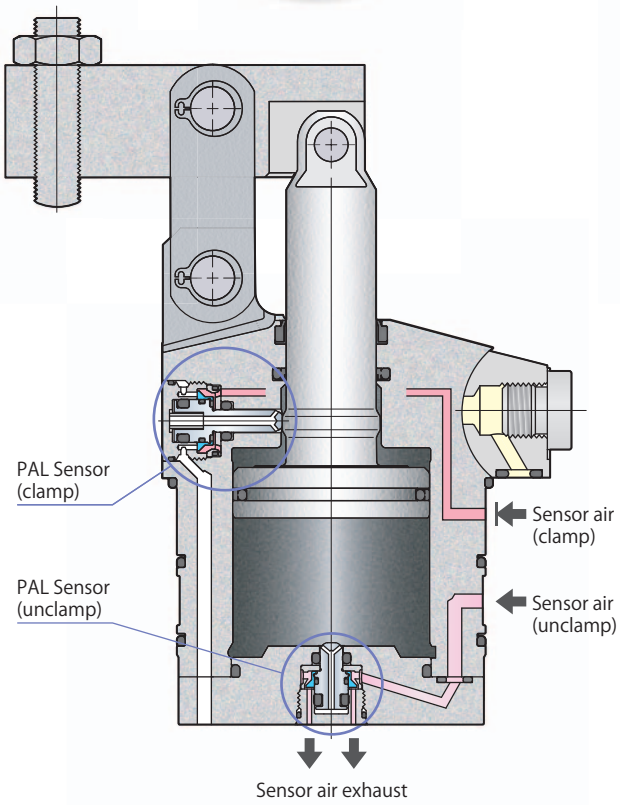

Hydraulic and pneumatic circuit diagram

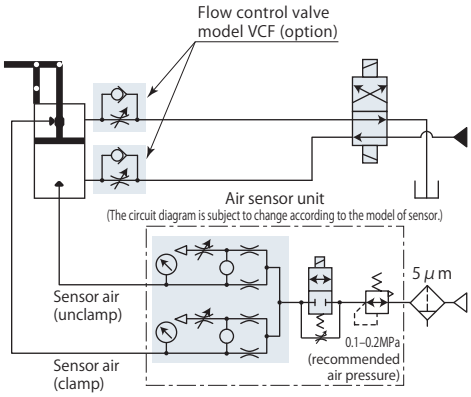

Specifications	page → 108
Piping	page → 109
PAL sensor	page → 112
Dimensions	page → 116
Mounting details	page → 118

Clamp sensor model C

Clamp, Over clamp stroke (Incomplete clamp) detection

model **CLM□-□C** PAT.

The clamp sensor model can detect the status of clamp and over clamp stroke with just 1 circuit of air.

Refer to **pages →120–123** for the details.

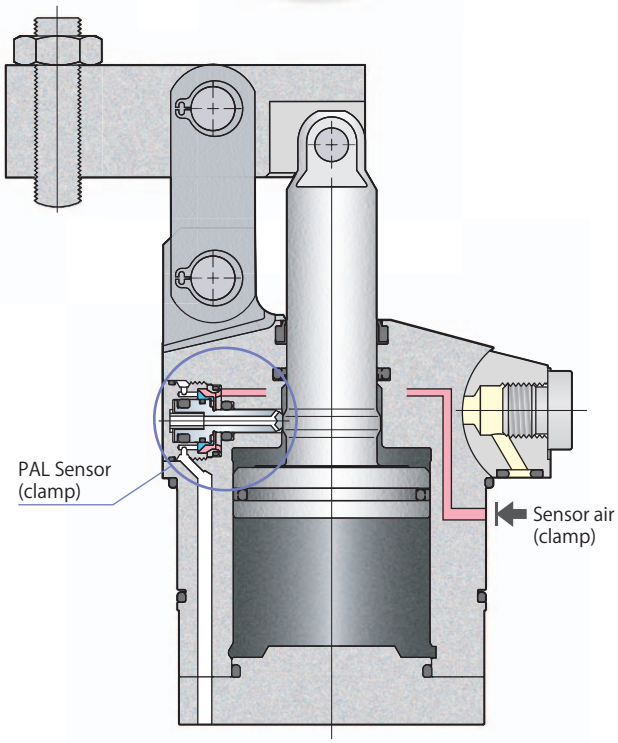

Hydraulic and pneumatic circuit diagram

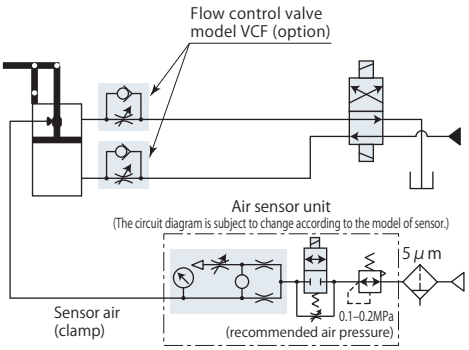

Specifications	page → 108
Piping	page → 109
PAL sensor	page → 120
Dimensions	page → 124
Mounting details	page → 126

Unclamp sensor model B

model **CLM□-□B** PAT.

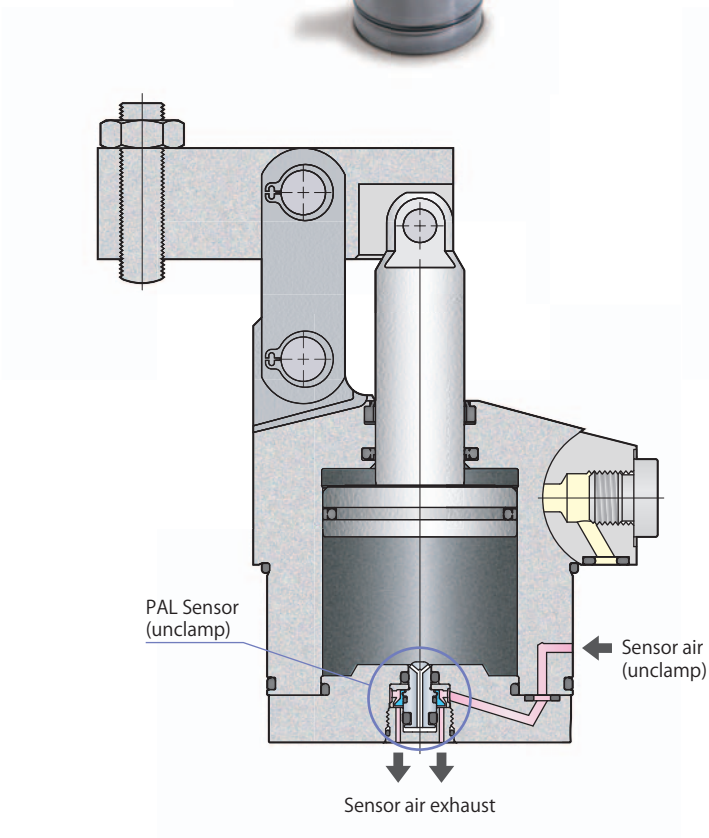

Compact model N

model **CLM□-□N**

No sensors available on compact model

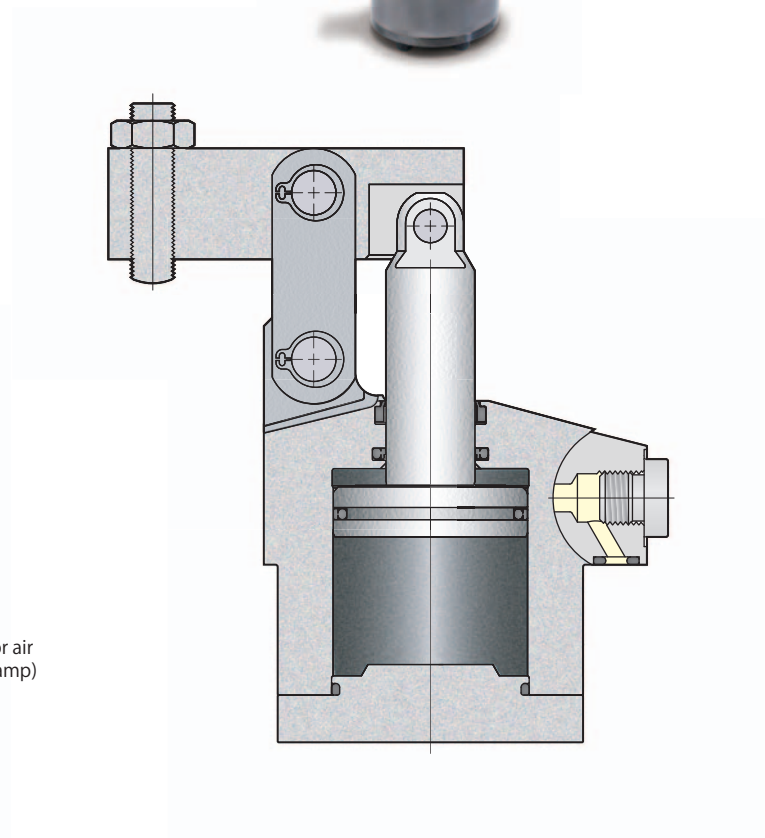

Hydraulic and pneumatic circuit diagram

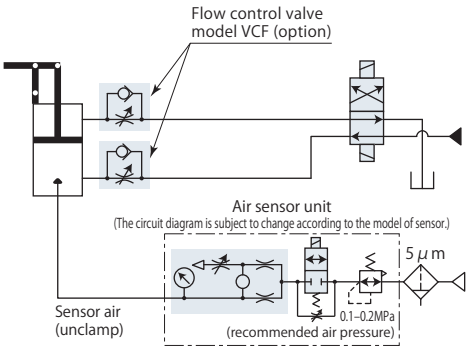

Hydraulic circuit diagram

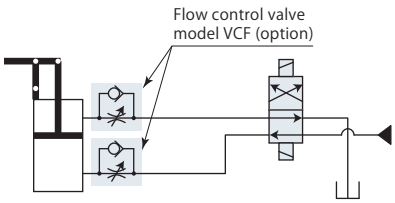

Specifications	page → 108
Piping	page → 109
PAL sensor	page → 129
Dimensions	page → 132
Mounting details	page → 134

Specifications	page → 108
Piping	page → 109
Dimensions	page → 136
Mounting details	page → 138

Specifications

CLM – Size: 03* / 04 / 05 / 06 / 10 / 16

Clamp arm mounting direction

- **L** : Left side
- **F** : Front side
- **R** : Right side

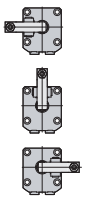

- **T** : 3 point sensor model
  Clamp, Unclamp, Over clamp stroke (Incomplete clamp) detection
- **C** : Clamp sensor model
  Clamp, Over clamp stroke (Incomplete clamp) detection
- **B** : Unclamp sensor model
- **N** : Compact model

∗: For compact model only (CLM03-□N).
Contact Pascal for the details of bottom piping specification.

Model			CLM03	CLM04	CLM05	CLM06	CLM10	CLM16
Cylinder force (hydraulic pressure 7MPa)		kN	3.2	3.7	5.0	6.7	11.1	16.6
Cylinder inner diameter		mm	24	26	30	35	45	55
Rod diameter		mm	10	12	14	16	20	22
Effective area (clamp)		cm^2	4.5	5.3	7.1	9.6	15.9	23.8
Full stroke		mm	18.5	20.5	23.5	26	29.5	35
Clamp stroke∗1		mm	16	17.5	20.5	23	26.5	32
Safety stroke		mm	2.5	3	3	3	3	3
Max. oil flow rate		L/min	0.8	1.1	1.7	2.6	5.1	9.1
Cylinder capacity	Clamp	cm^3	8.4	10.9	16.6	25.0	46.9	83.2
	Unclamp	cm^3	6.9	8.6	13.0	19.8	37.7	69.9
Mass	CLM□-□T, C	kg	–	0.7	1.1	1.4	2.3	3.2
	CLM□-□B, N	kg	0.5	0.6	0.9	1.2	2.0	3.0
Recommended tightening torque of mounting screws∗2		N·m	3.5	7	7	12	12	29

- Pressure range: 1.5–7 MPa (model CLM-T, CLM-C, CLM-B), 0.5–7 MPa (model CLM-N)
- Proof pressure: 10.5 MPa
- Operating temperature: 0–70 ℃
- Fluid used: General mineral based hydraulic oil (ISO-VG32 equivalent)
- Seals are resistant to chlorine-based cutting fluid. (not thermal resistant specification)

∗1: Indicates a distance from unclamping position to clamping point. ∗2: ISO R898 class 12.9

When clamping the workpiece, the clamp arm should be situated like the sketch as shown below. (Clamping point)
Please avoid any non-axial force such as the bending moment toward the piston rod. (Allowable angle ±3°)

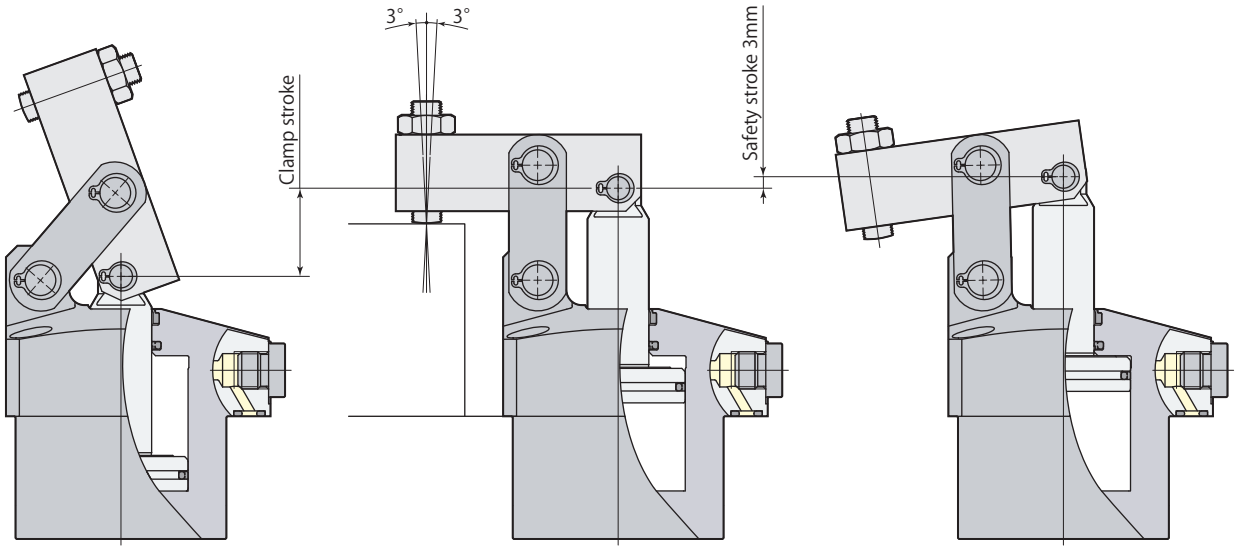

Unclamp | Clamping point | Over clamp stroke (Full stroke)

Manifold piping and G port piping are available.

Manifold piping

When choosing manifold piping, a flow control valve (model VCF) and an air bleeding valve (model VCE) are mountable on the G ports of the clamp.

G port piping

Remove plugs when choosing G port piping. (O-ring must be used.) Refer to **page →220** for details on G port piping flareless fitting. The flow control valve and the air bleeding valve should be installed in the middle of oil path.

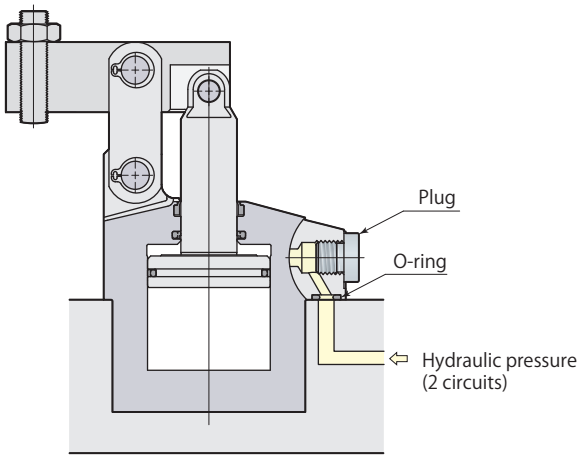

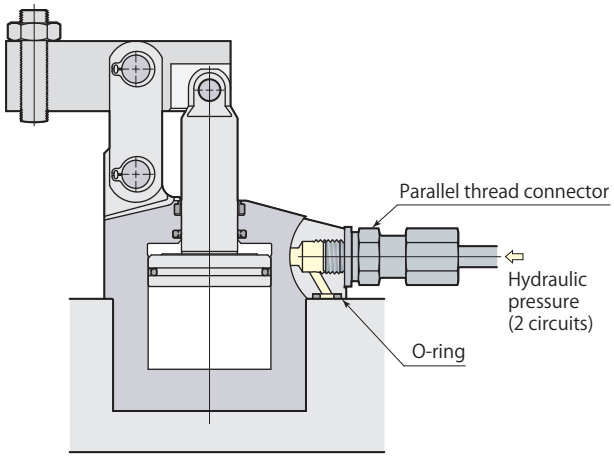

Flow control valve model VCF

Page →164

Air bleeding valve model VCE

Page →166

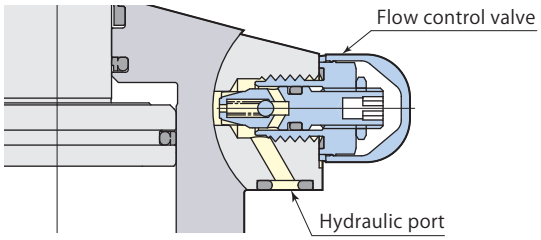

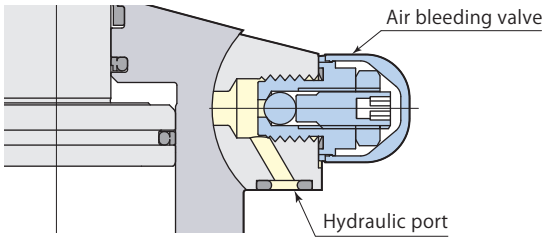

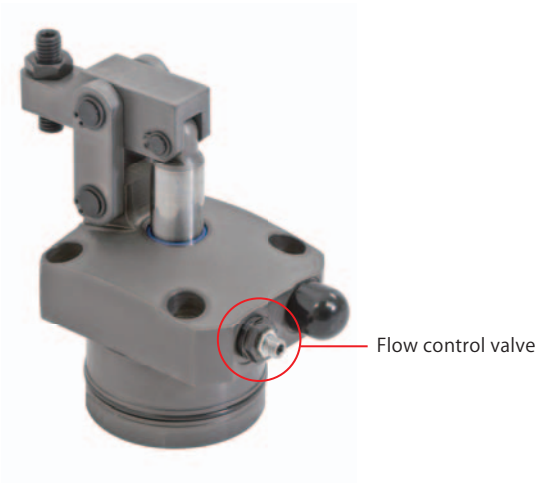

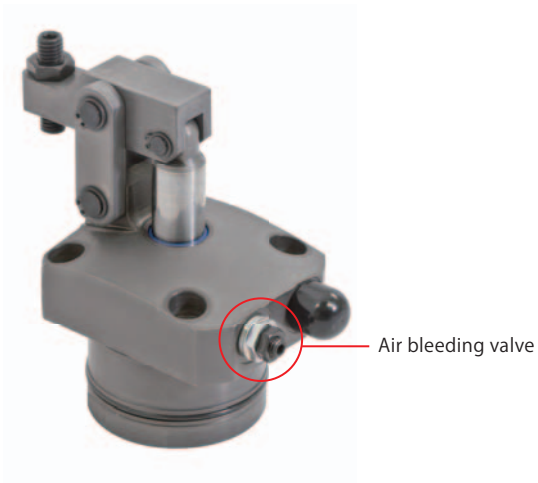

● In case of mounting flow control valve model VCF on the G port of the clamp, air bleeding valve should be installed in the piping to the clamp. (VCE Mounting details. Refer to **page →166**)

Performance diagram

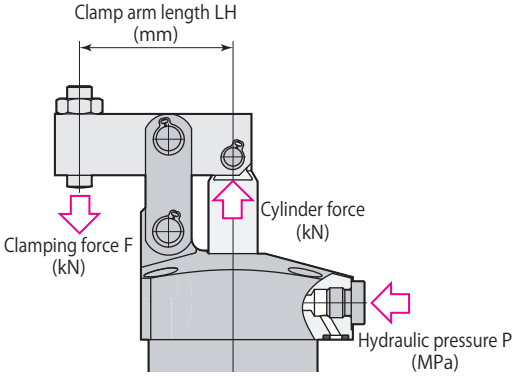

Clamping force varies depending on the clamp arm length (LH) and hydraulic pressure (P).

Clamping force calculation formula
F = Coefficient 1 × P/(LH - Coefficient 2)
F : Clamping force P : Hydraulic pressure LH : Clamp arm length

CLM06 with clamp arm length (LH) = 50 mm at hydraulic pressure of 7 MPa, Clamping force F is calculated by
18.18×7/(50-21.0)=4.4 kN

Do not use the clamp in the nonusable range. It may cause damage of link mechanism.

model CLM03

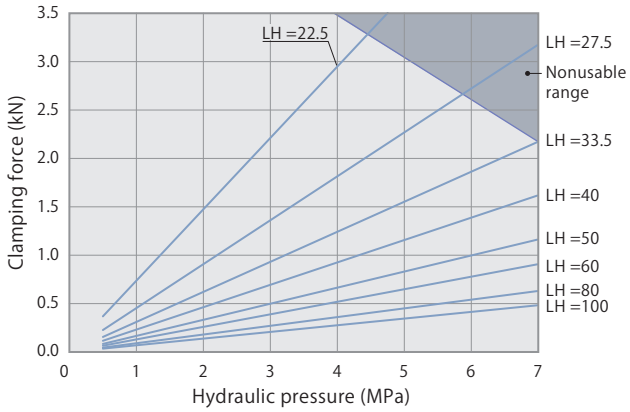

model CLM04

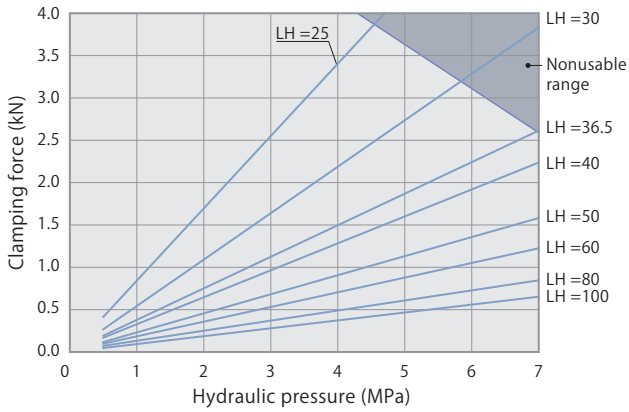

model CLM05

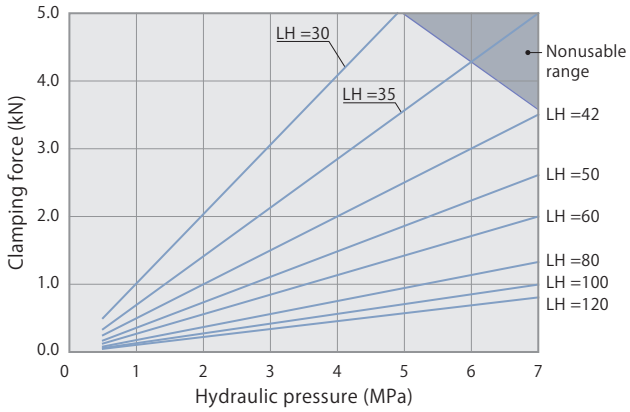

model CLM06

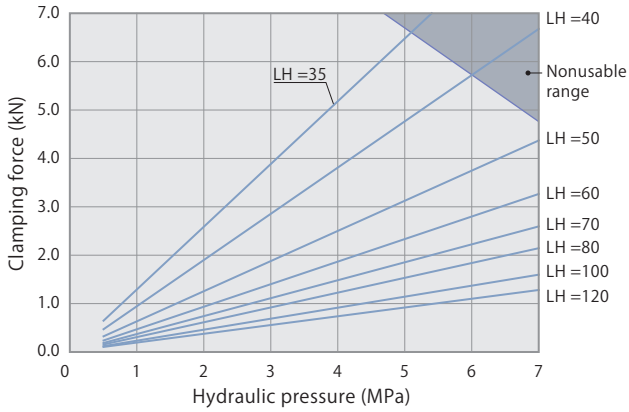

model CLM10

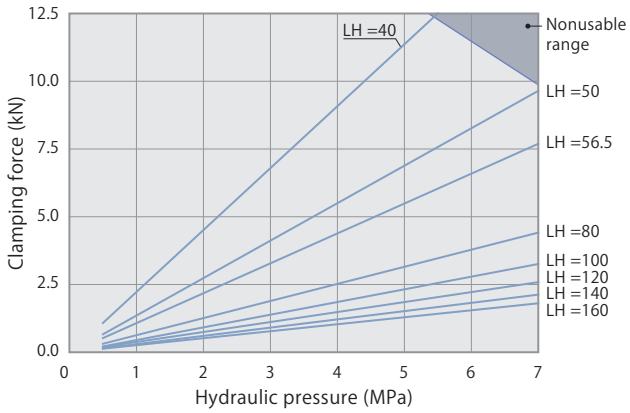

model CLM16

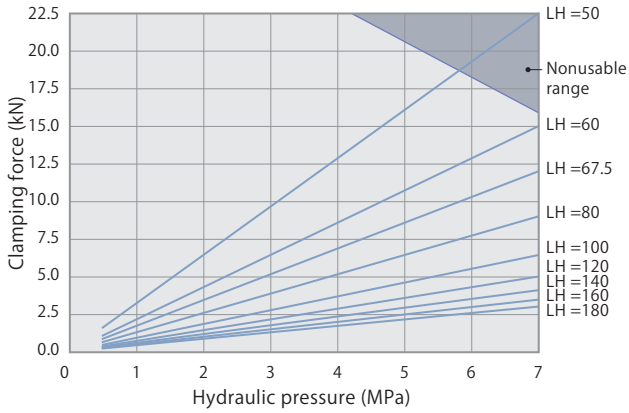

Performance table

model CLM03 Clamping force F=5.90×P/(LH-14.5)

Hydraulic pressure MPa	Cylinder force kN	Clamping force kN / Clamp arm length LH mm 22.5	27.5	33.5	40	50	60	80	100	Min. arm length Min. LH mm
7	3.2				1.6	1.2	0.9	0.6	0.5	34
6.5	2.9			2.0	1.5	1.1	0.8	0.6	0.4	31
6	2.7			1.9	1.4	1.0	0.8	0.5	0.4	29
5.5	2.5		2.5	1.7	1.3	0.9	0.7	0.5	0.4	27
5	2.3		2.3	1.6	1.2	0.8	0.6	0.5	0.3	25
4.5	2.0		2.0	1.4	1.0	0.7	0.6	0.4	0.3	23
4	1.8	3.0	1.8	1.2	0.9	0.7	0.5	0.4	0.3	22
3.5	1.6	2.6	1.6	1.1	0.8	0.6	0.5	0.3	0.2	21
3	1.4	2.2	1.4	0.9	0.7	0.5	0.4	0.3	0.2	↑
2.5	1.1	1.8	1.1	0.8	0.6	0.4	0.3	0.2	0.2	↑
2	0.9	1.5	0.9	0.6	0.5	0.3	0.3	0.2	0.1	↑
1.5	0.7	1.1	0.7	0.5	0.3	0.2	0.2	0.1	0.1	↑
1	0.5	0.7	0.5	0.3	0.2	0.2	0.1	0.1	0.1	↑
0.5	0.2	0.4	0.2	0.2	0.1	0.1	0.1	0.0	0.0	21
Max. pressure MPa		4.4	5.8	7.0	7.0	7.0	7.0	7.0	7.0	

indicates nonusable range

model CLM04 Clamping force F=7.65×P/(LH-16.0)

Hydraulic pressure MPa	Cylinder force kN	Clamping force kN / Clamp arm length LH mm 25	30	36.5	40	50	60	80	100	Min. arm length Min. LH mm
7	3.7			2.6	2.2	1.6	1.2	0.8	0.6	36.5
6.5	3.5			2.4	2.1	1.5	1.1	0.8	0.6	34
6	3.2			2.2	1.9	1.3	1.0	0.7	0.5	31
5.5	2.9		3.0	2.1	1.8	1.2	1.0	0.7	0.5	29
5	2.7		2.7	1.9	1.6	1.1	0.9	0.6	0.5	27
4.5	2.4	3.8	2.5	1.7	1.4	1.0	0.8	0.5	0.4	25
4	2.1	3.4	2.2	1.5	1.3	0.9	0.7	0.5	0.4	24
3.5	1.9	3.0	1.9	1.3	1.1	0.8	0.6	0.4	0.3	↑
3	1.6	2.5	1.6	1.1	1.0	0.7	0.5	0.4	0.3	↑
2.5	1.3	2.1	1.4	0.9	0.8	0.6	0.4	0.3	0.2	↑
2	1.1	1.7	1.1	0.7	0.6	0.4	0.3	0.2	0.2	↑
1.5	0.8	1.3	0.8	0.6	0.5	0.3	0.3	0.2	0.1	↑
1	0.5	0.8	0.5	0.4	0.3	0.2	0.2	0.1	0.1	↑
0.5	0.3	0.4	0.3	0.2	0.2	0.1	0.1	0.1	0.1	24
Max. pressure MPa		4.5	5.8	7.0	7.0	7.0	7.0	7.0	7.0	

indicates nonusable range

model CLM05 Clamping force F=11.77×P/(LH-18.5)

Hydraulic pressure MPa	Cylinder force kN	Clamping force kN / Clamp arm length LH mm 30	35	42	50	60	80	100	120	Min. arm length Min. LH mm
7	5.0			3.5	2.6	2.0	1.3	1.0	0.8	42
6.5	4.6			3.3	2.4	1.8	1.2	0.9	0.8	39
6	4.2			3.0	2.2	1.7	1.1	0.9	0.7	36
5.5	3.9		3.9	2.8	2.1	1.6	1.1	0.8	0.6	33
5	3.5		3.6	2.5	1.9	1.4	1.0	0.7	0.6	31
4.5	3.2	4.6	3.2	2.3	1.7	1.3	0.9	0.6	0.5	29
4	2.8	4.1	2.9	2.0	1.5	1.1	0.8	0.6	0.5	27
3.5	2.5	3.6	2.5	1.8	1.3	1.0	0.7	0.5	0.4	↑
3	2.1	3.1	2.1	1.5	1.1	0.9	0.6	0.4	0.3	↑
2.5	1.8	2.6	1.8	1.3	0.9	0.7	0.5	0.4	0.3	↑
2	1.4	2.0	1.4	1.0	0.7	0.6	0.4	0.3	0.2	↑
1.5	1.1	1.5	1.1	0.8	0.6	0.4	0.3	0.2	0.2	↑
1	0.7	1.0	0.7	0.5	0.4	0.3	0.2	0.1	0.1	↑
0.5	0.4	0.5	0.4	0.3	0.2	0.1	0.1	0.1	0.1	27
Max. pressure MPa		4.9	5.9	7.0	7.0	7.0	7.0	7.0	7.0	

indicates nonusable range

model CLM06 Clamping force F=18.18×P/(LH-21.0)

Hydraulic pressure MPa	Cylinder force kN	Clamping force kN / Clamp arm length LH mm 35	40	50	60	70	80	100	120	Min. arm length Min. LH mm
7	6.7			4.4	3.3	2.6	2.2	1.6	1.3	48
6.5	6.3			4.1	3.0	2.4	2.0	1.5	1.2	44
6	5.8			3.8	2.8	2.2	1.8	1.4	1.1	41
5.5	5.3		5.3	3.4	2.6	2.0	1.7	1.3	1.0	38
5	4.8	6.5	4.8	3.1	2.3	1.9	1.5	1.2	0.9	35
4.5	4.3	5.8	4.3	2.8	2.1	1.7	1.4	1.0	0.8	33
4	3.8	5.2	3.8	2.5	1.9	1.5	1.2	0.9	0.7	31
3.5	3.4	4.5	3.3	2.2	1.6	1.3	1.1	0.8	0.6	↑
3	2.9	3.9	2.9	1.9	1.4	1.1	0.9	0.7	0.6	↑
2.5	2.4	3.2	2.4	1.6	1.2	0.9	0.8	0.6	0.5	↑
2	1.9	2.6	1.9	1.3	0.9	0.7	0.6	0.5	0.4	↑
1.5	1.4	1.9	1.4	0.9	0.7	0.6	0.5	0.3	0.3	↑
1	1.0	1.3	1.0	0.6	0.5	0.4	0.3	0.2	0.2	↑
0.5	0.5	0.6	0.5	0.3	0.2	0.2	0.2	0.1	0.1	31
Max. pressure MPa		5.0	5.9	7.0	7.0	7.0	7.0	7.0	7.0	

indicates nonusable range

model CLM10 Clamping force F=35.07×P/(LH-24.5)

Hydraulic pressure MPa	Cylinder force kN	Clamping force kN / Clamp arm length LH mm 40	50	56.5	80	100	120	140	160	Min. arm length Min. LH mm
7	11.1		9.6	7.7	4.4	3.3	2.6	2.1	1.8	50
6.5	10.3		8.9	7.1	4.1	3.0	2.4	2.0	1.7	46
6	9.5		8.3	6.6	3.8	2.8	2.2	1.8	1.6	43
5.5	8.7		7.6	6.0	3.5	2.6	2.0	1.7	1.4	41
5	8.0	11.3	6.9	5.5	3.2	2.3	1.8	1.5	1.3	38
4.5	7.2	10.2	6.2	4.9	2.8	2.1	1.7	1.4	1.2	36
4	6.4	9.1	5.5	4.4	2.5	1.9	1.5	1.2	1.0	↑
3.5	5.6	7.9	4.8	3.8	2.2	1.6	1.3	1.1	0.9	↑
3	4.8	6.8	4.1	3.3	1.9	1.4	1.1	0.9	0.8	↑
2.5	4.0	5.7	3.4	2.7	1.6	1.2	0.9	0.8	0.6	↑
2	3.2	4.5	2.8	2.2	1.3	0.9	0.7	0.6	0.5	↑
1.5	2.4	3.4	2.1	1.6	0.9	0.7	0.6	0.5	0.4	↑
1	1.6	2.3	1.4	1.1	0.6	0.5	0.4	0.3	0.3	↑
0.5	0.8	1.1	0.7	0.5	0.3	0.2	0.2	0.2	0.1	36
Max. pressure MPa		5.4	7.0	7.0	7.0	7.0	7.0	7.0	7.0	

indicates nonusable range

model CLM16 Clamping force F=64.15×P/(LH-30.0)

Hydraulic pressure MPa	Cylinder force kN	Clamping force kN / Clamp arm length LH mm 50	60	67.5	80	100	120	140	160	180	Min. arm length Min. LH mm
7	16.6		15.0	12.0	9.0	6.4	5.0	4.1	3.5	3.0	59
6.5	15.4		13.9	11.1	8.3	6.0	4.6	3.8	3.2	2.8	55
6	14.3		12.8	10.3	7.7	5.5	4.3	3.5	3.0	2.6	52
5.5	13.1	17.6	11.8	9.4	7.1	5.0	3.9	3.2	2.7	2.4	49
5	11.9	16.0	10.7	8.6	6.4	4.6	3.6	2.9	2.5	2.1	46
4.5	10.7	14.4	9.6	7.7	5.8	4.1	3.2	2.6	2.2	1.9	44
4	9.5	12.8	8.6	6.8	5.1	3.7	2.9	2.3	2.0	1.7	↑
3.5	8.3	11.2	7.5	6.0	4.5	3.2	2.5	2.0	1.7	1.5	↑
3	7.1	9.6	6.4	5.1	3.8	2.7	2.1	1.7	1.5	1.3	↑
2.5	5.9	8.0	5.3	4.3	3.2	2.3	1.8	1.5	1.2	1.1	↑
2	4.8	6.4	4.3	3.4	2.6	1.8	1.4	1.2	1.0	0.9	↑
1.5	3.6	4.8	3.2	2.6	1.9	1.4	1.1	0.9	0.7	0.6	↑
1	2.4	3.2	2.1	1.7	1.3	0.9	0.7	0.6	0.5	0.4	↑
0.5	1.2	1.6	1.1	0.9	0.6	0.5	0.4	0.3	0.2	0.2	44
Max. pressure MPa		5.8	7.0	7.0	7.0	7.0	7.0	7.0	7.0	7.0	

indicates nonusable range

● Sensor model (model CLM-T, CLM-C, CLM-B) applicable hydraulic pressure should be 1.5 to 7MPa.

PAL sensor function and structure

Unclamp detection

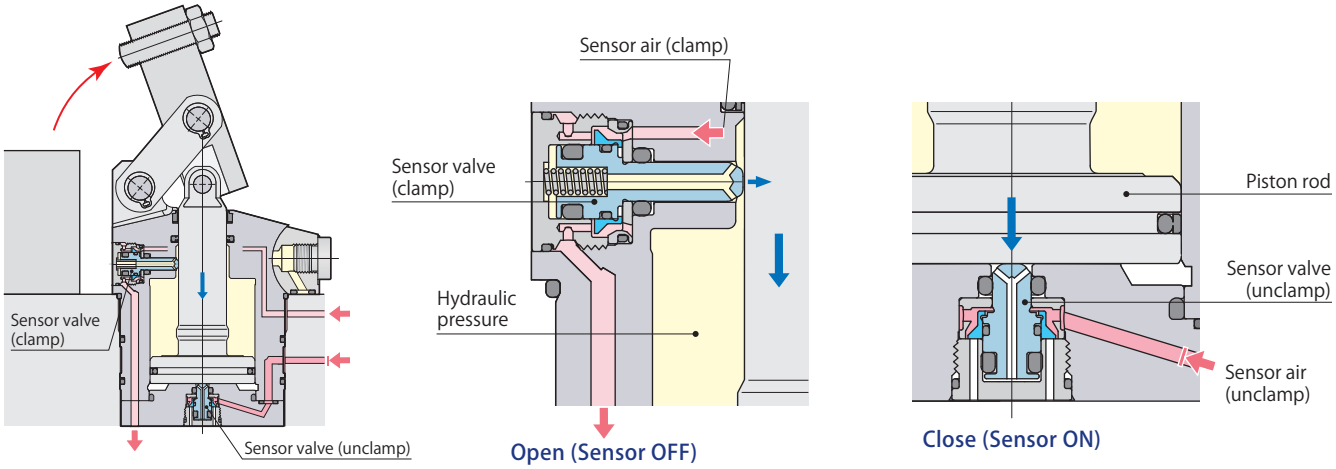

● The sensor valve (unclamp) is pushed down by the piston rod and shuts off the sensor air flow when the piston rod reaches the unclamp end. The sensor valve (clamp) is pushed up by the hydraulic force to open for air exhaust and detects the unclamped condition.

Clamp detection

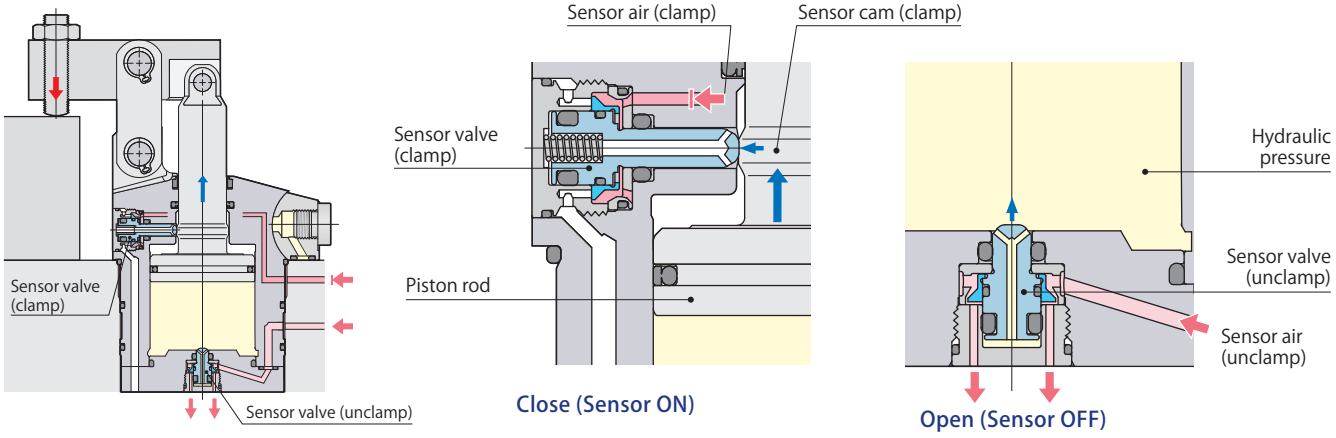

● The sensor valve (clamp) is pushed down by the sensor cam (clamp) and shuts off the sensor air flow when the piston rod reaches the clamping point. The sensor valve (unclamp) is pushed up by the hydraulic force to open for air exhaust and detects the clamped condition.

PAL sensor function and structure

Over clamp stroke (Incomplete clamp) detection

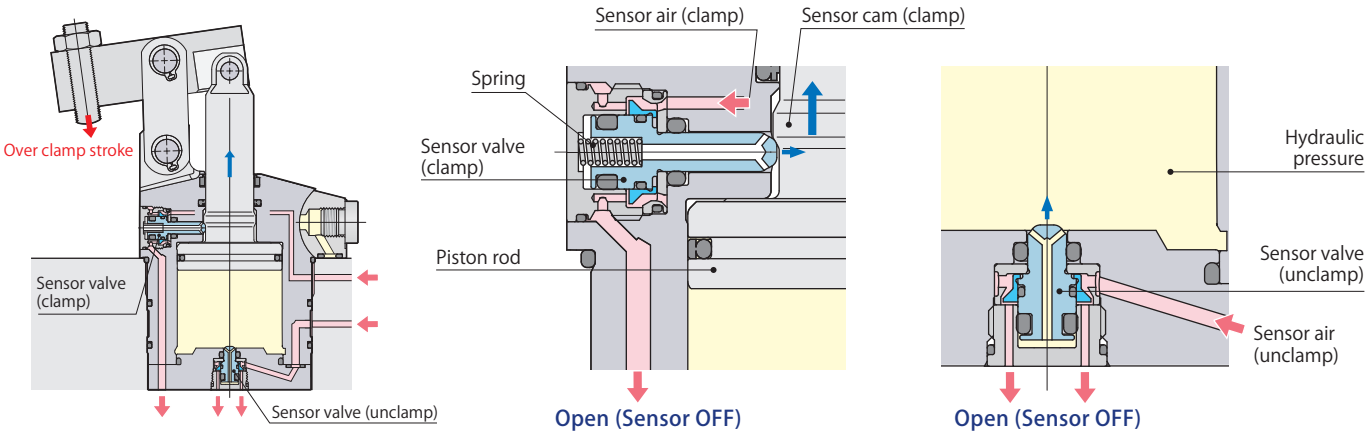

- The sensor cam passes the clamping point, the sensor valve (clamp) is pushed up by the spring and exhausts the sensor air. Also the sensor valve (unclamp) exhausts the air and detects the over clamp stroked (incomplete clamp) condition.

Over clamp stroke (Incomplete clamp) detection example

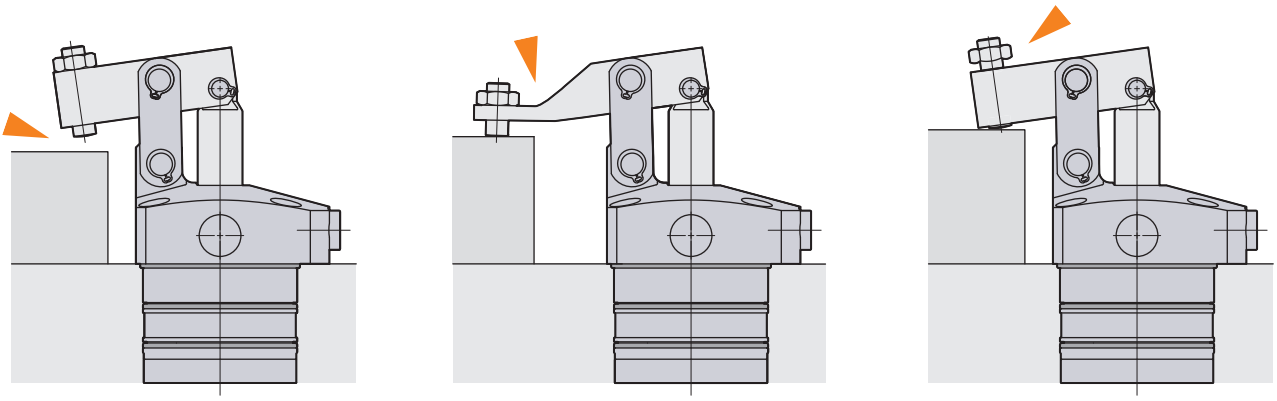

- Clamp disabled due to missetting workpiece.
- Clamp disabled due to the deflection of clamp arm.
- Clamp disabled due to the damage of piston rod or loose adjustment bolt.
- Clamp disabled due to the abrasion on the tip of clamp arm during prolonged use.

Clamp, Unclamp, Over clamp stroke detection signal

Unclamp detection

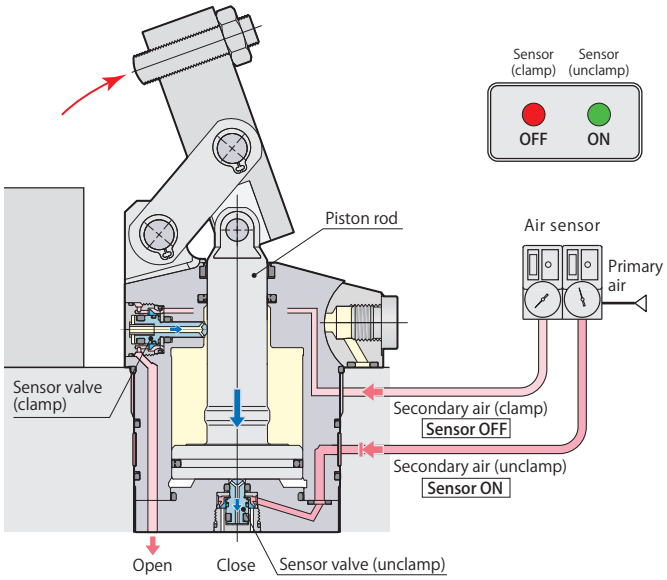

The sensor may not work correctly when the cylinder is not pressurized by hydraulic force because the piston of the clamp moves under such environment. Keep supplying hydraulic force the cylinder all the times.

Sensor signal (clamp)	OFF	Unclamp
Sensor signal (unclamp)	ON	

In the middle of clamp stroke

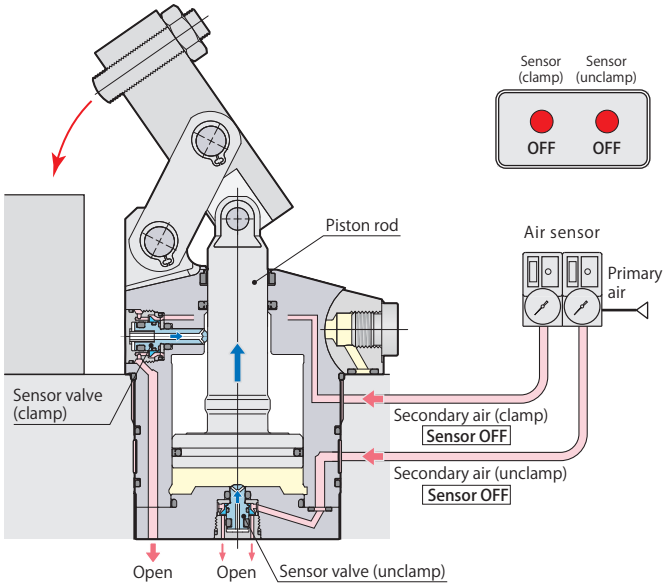

Sensor signal (clamp)	OFF	In the middle of clamp stroke
Sensor signal (unclamp)	OFF	

More than 1.5MPa hydraulic pressure is required to operate the sensor valve. To obtain OFF signal in the middle of the valve stroke, over 1.5MPa of back pressure should be produced by using a meter-out type of flow control valve.

Clamp detection

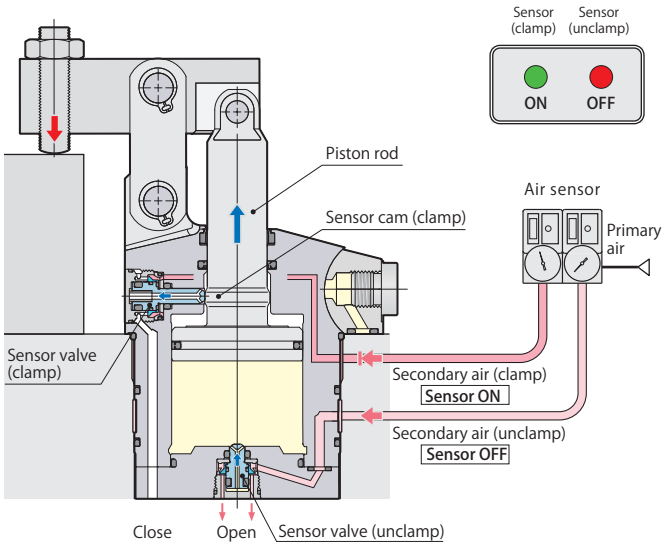

Sensor signal (clamp)	ON	Clamp
Sensor signal (unclamp)	OFF	

Over clamp stroke (Incomplete clamp) detection

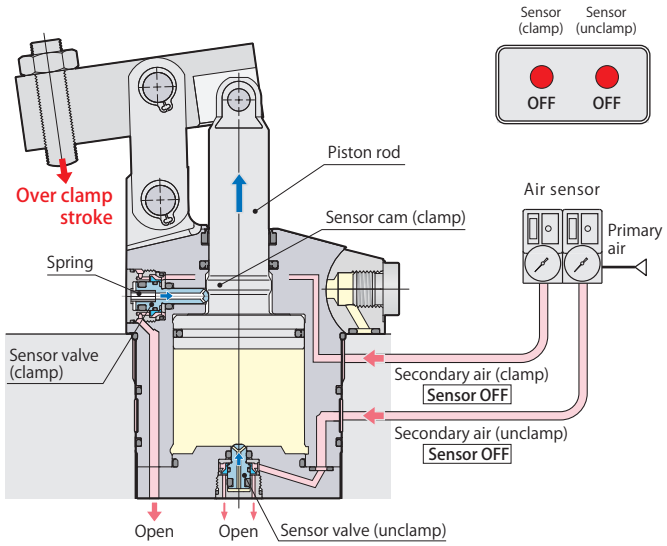

Sensor signal (clamp)	OFF	Over clamp stroke (Incomplete clamp)
Sensor signal (unclamp)	OFF	

Air sensor triggering point

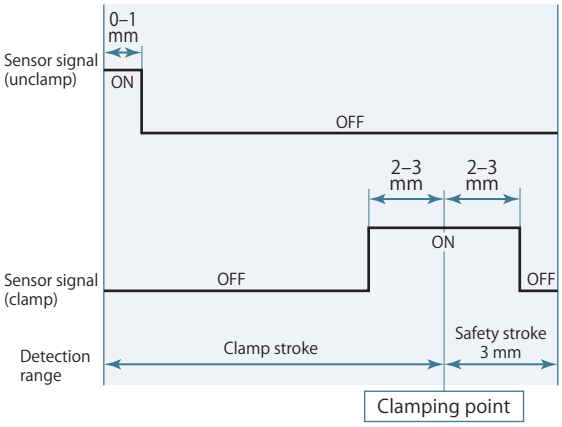

- Refer to the sensor supplier's instruction manual for the details of setting.
- Sensing performance such as detectable time and pressure differs depending on the supplier and model number of the sensor. Select the right model referring to sensor's application and characteristics.

Air sensor unit recommended condition of use

Supplier and model	ISA3-F/G series manufactured by SMC
	GPS2-05, GPS3-E series manufactured by CKD
Air supply pressure	0.1–0.2 MPa
Inner diameter of piping	ø4 mm (ISA3-F：ø2.5 mm)
Overall piping length	5 m or less

- Supply the dry and filtered air. Particulate size 5 μm or less is recommended.
- Use a solenoid valve with needle for air sensor unit and control it supplying air all the time in order to eliminate intrusion of chips or coolant.
- There is a case that air sensing cannot be successfully made as designed when it is used out of the above usage. Contact Technical service center for more details.

Relation between sensor air pressure, PAL sensor and piston stroke

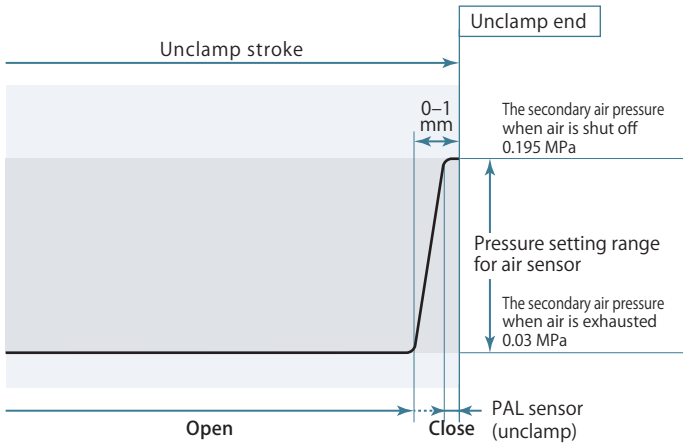

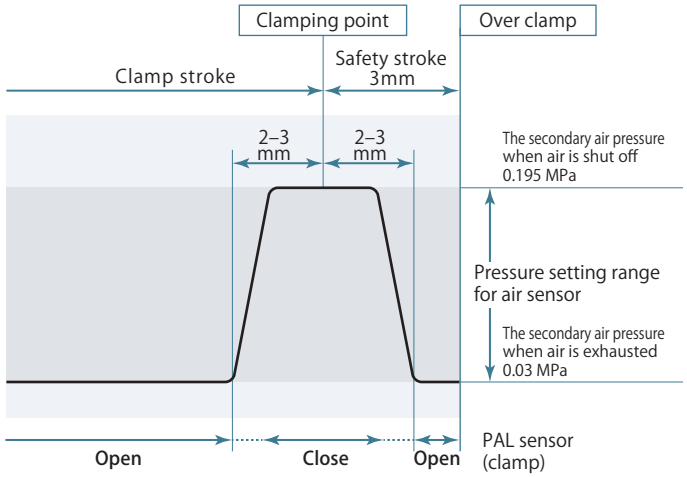

The diagram shown on the left indicates the relation between the PAL sensor, piston stroke, and secondary air pressure. (The pressure shown in the diagram is a reference based on the 0.2 MPa of primary air pressure for one piece of clamp.)

Since the new PAL sensor works with less air-leakage compared to previous sensor valve,

- Enhances the pressure setting range of the sensor which enables the sensor to set easily.
  (Ex. Pressure setting range 0.03–0.195 MPa in the diagram)
- Allows the use for a number of clamps by one air sensor because of better pressure holding when air is shut off.
  (Maximum number of clamps to be detected by one sensor is 10.)
- Allows to choose less air-consumed, i.e. small orifice diameter type, air sensor.
- Can create large differential-pressure when opening and closing the PAL sensor so that sensor primary pressure can be set as low as possible and reduce the consumption of air.

New PAL sensor

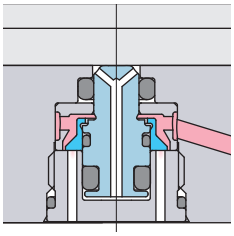

Poppet structure ensures superior sealing performance and can create large differential-pressure when the valve is opening and closing, and air leakage can be minimized.

Previous sensor valve

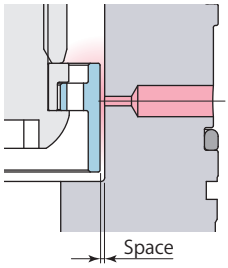

Air leaks easily due to a large space.

Dimensions

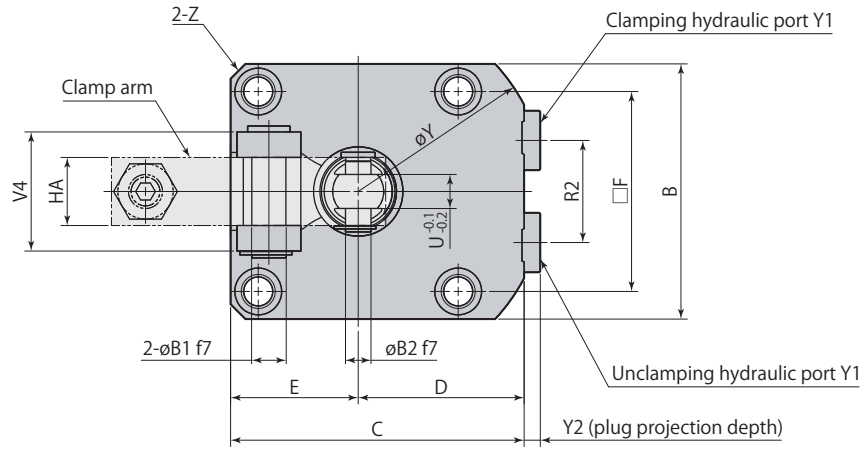

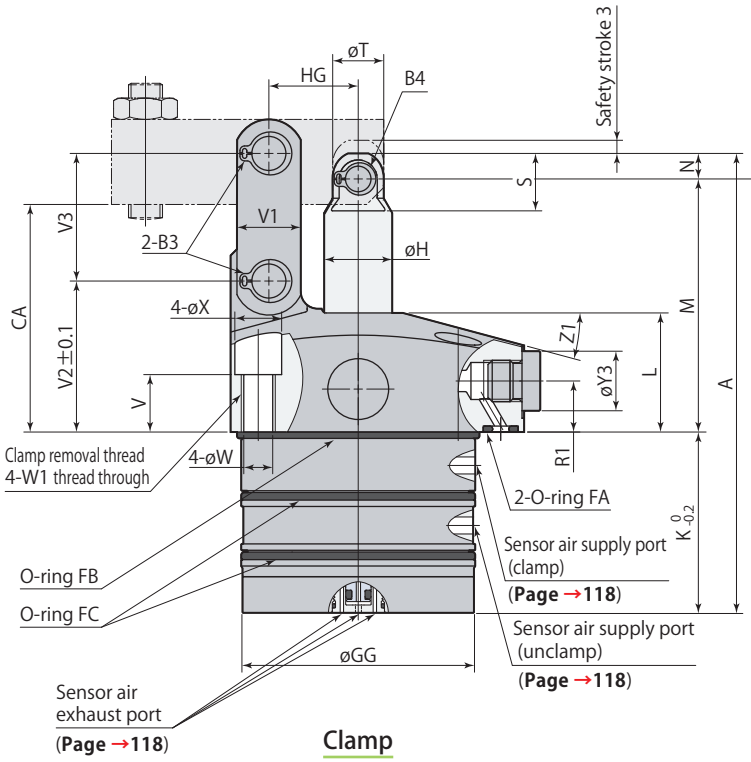

Clamp

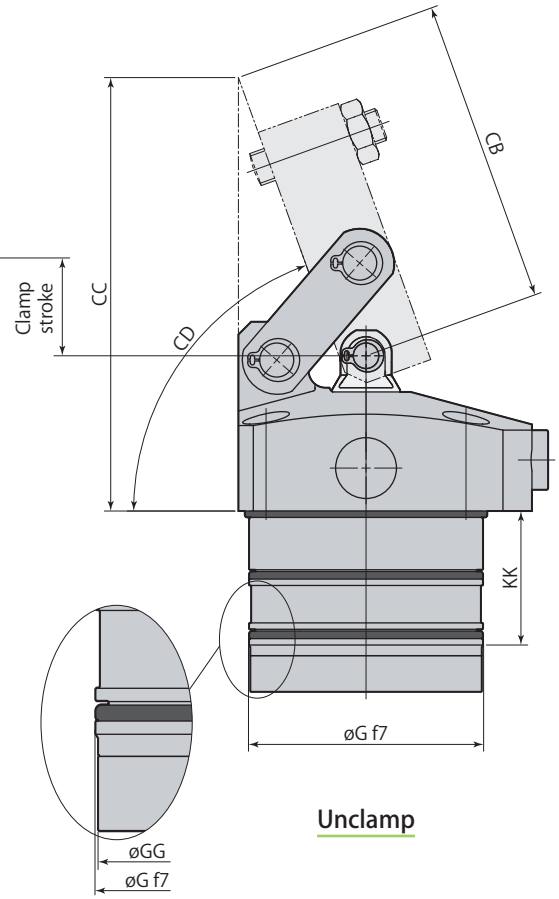

Unclamp

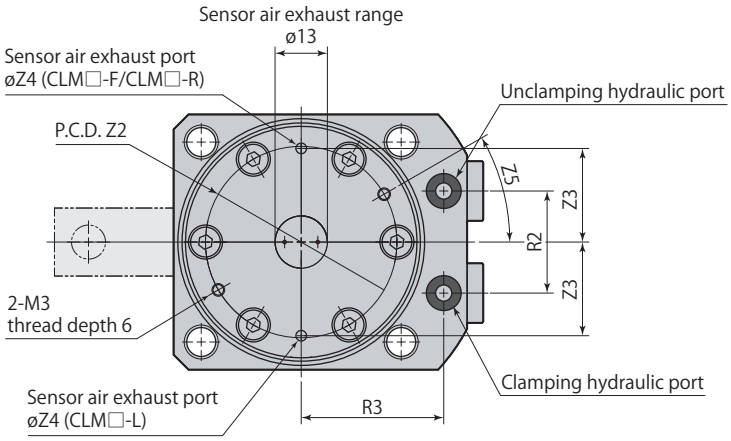

- This diagram represents external contour of CLM□-F. CLM□-L and CLM□-R differ only in terms of mounting direction of clamp arm and otherwise all dimensions are identical to those of CLM□-F.

L:Left side F:Front side R:Right side

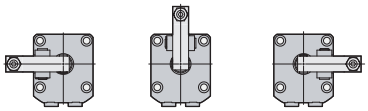

- Clamp arm and mounting screws are not included.

mm

Model	CLM04-□T	CLM05-□T	CLM06-□T	CLM10-□T	CLM16-□T
A	96.5	106	108	124	139.5
B	45	51	60	70	85
C	54	61	69	81	94.5
D	31.5	35.5	39	46	52
E	22.5	25.5	30	35	42.5
F	34	40	47	55	63
øG	$40^{-0.025}_{-0.050}$	$48^{-0.025}_{-0.050}$	$55^{-0.030}_{-0.060}$	$65^{-0.030}_{-0.060}$	$75^{-0.030}_{-0.060}$
øGG	39.4	47.4	54.4	64.4	74.4
øH	12	14	16	20	22
K	41	43	42.5	49	47.5
KK	31.5	31.5	31.5	31.5	31.5
L	25	28	28	30	37
M	50	57	59.5	67	82
N	5.5	6	6	8	10
R1	11	12	12	13	16
R2	18	22	24	30	32
R3	26	30	33.5	39.5	45
S	12.5	13.5	13.5	17.5	22
øT	11	12	12	15	19
U (width across flats)	6	6	8	10	11
V	15.5	16.5	13.5	15.5	17.5
V1	11	13	15	19	25
V2	30.5	34.5	35.5	39	48
V3	22	26	30	35.5	43.5
V4	21	21	28	37	40
øW	5.5	5.5	6.8	6.8	9
W1	M6×1	M6×1	M8×1.25	M8×1.25	M10×1.5
øX	9.5	9.5	11	11	14
øY	72	81	88	106	116
Y1	G1/8	G1/8	G1/8	G1/8	G1/4
Y2	3.8	3.8	3.8	3.8	4.8
øY3	14	14	14	14	19
Z	C3	C3	C3.5	C4.5	C10
Z1	15°	15°	15°	12°	15°
Z2	32	38	45	53.5	65
Z3	16	19.5	22	27.5	32.5
Z4	2.5	2.5	2.5	3.3	3.3
Z5	30°	30°	30°	30°	10°
øB1	$6^{-0.010}_{-0.022}$	$6^{-0.010}_{-0.022}$	$8^{-0.013}_{-0.028}$	$10^{-0.013}_{-0.028}$	$12^{-0.016}_{-0.034}$
øB2	$6^{-0.010}_{-0.022}$	$6^{-0.010}_{-0.022}$	$6^{-0.010}_{-0.022}$	$8^{-0.013}_{-0.028}$	$10^{-0.013}_{-0.028}$
B3 (snap ring)*1	STW-6	STW-6	STW-8	STW-10	STW-12
B4 (snap ring)*1	STW-6	STW-6	STW-6	STW-8	STW-10
CA	44.5	51	53.5	59	72
CB	50.2	61.2	71.7	78.7	90.8
CC	77.7	92.4	101.9	111.4	130.8
CD	About 70°	About 71°	About 70°	About 70°	About 69°
HA	12	12	16	19	22
HG	16	18.5	21	24.5	30
O-ring FA (fluorocarbon hardness Hs90)	P5	P5	P5	P7	P7
O-ring FB (fluorocarbon hardness Hs70)	AS568-029	AS568-031	AS568-034	AS568-037	AS568-040
O-ring FC (fluorocarbon hardness Hs70)	AS568-028	AS568-031	AS568-033	AS568-036	AS568-039
Flow control valve*2 Meter-in	VCF01S	VCF01	VCF01	VCF01	VCF02
Flow control valve*2 Meter-out	VCF01S-O	VCF01-O	VCF01-O	VCF01-O	VCF02-O
Air bleeding valve*2	VCE01	VCE01	VCE01	VCE01	VCE02

*1: Snap ring is made by Ochiai Corporation.

*2: Select the right model of VCF and VCE according to the size of the clamp.

Refer to each page for the details of options. Flow control valve **page →164** Air bleeding valve **page →166**

Mounting details

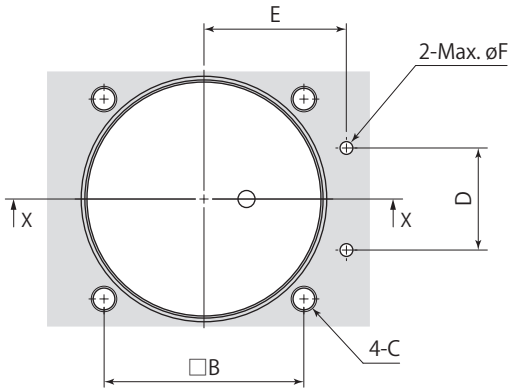

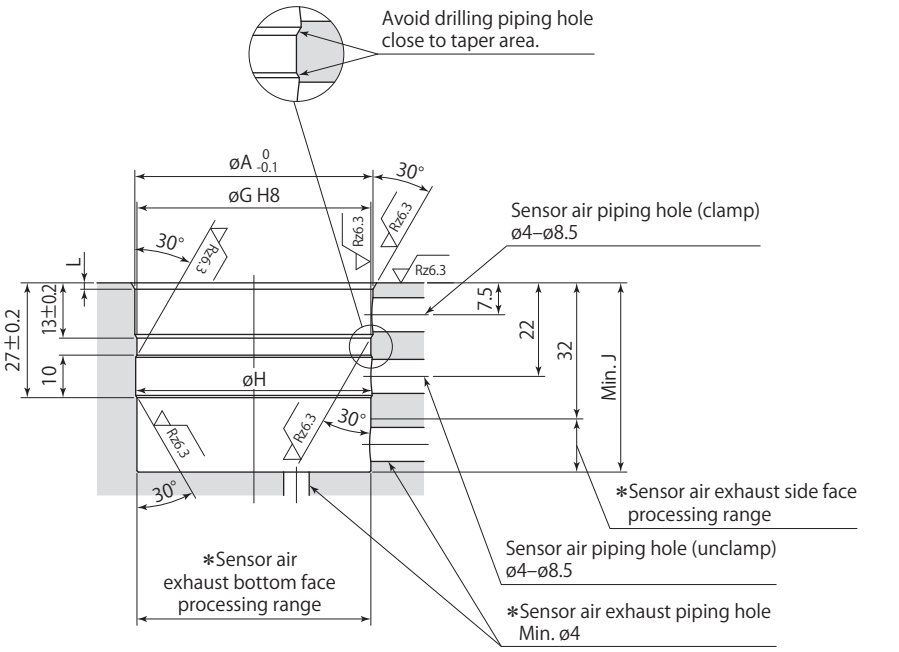

In blind hole X-X

∗: Sensor air exhaust piping hole must be made on either side or bottom face.

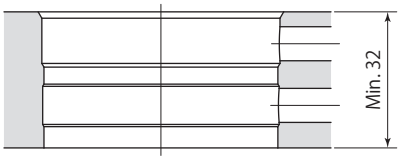

In through hole X-X

Rz: ISO4287(1997)

- Apply an appropriate amount of grease to the chamfer and the bore when mounting. Excessive grease may be a blockage in the air passage, causing malfunction of the sensor.
- The 30° taper machining must be provided to avoid the damage of the O-ring. Ensure that there are no interference on taper area when drilling the hole for sensor air.
- The sensor air piping hole can be used for a pilot hole of Rc 1/8 plug.

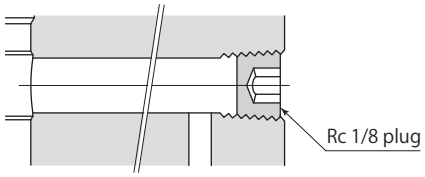

Mounting details

mm

Model	CLM04-□T	CLM05-□T	CLM06-□T	CLM10-□T	CLM16-□T
øA	40.8	49	56	66	76
B	34	40	47	55	63
C	M5	M5	M6	M6	M8
D	18	22	24	30	32
E	26	30	33.5	39.5	45
øF	3	3	3	5	5
øG	$40^{+0.039}_{0}$	$48^{+0.039}_{0}$	$55^{+0.046}_{0}$	$65^{+0.046}_{0}$	$75^{+0.046}_{0}$
øH	40.6	48.6	55.6	65.6	75.6
J	41.5	43.5	43	49.5	48
L	1.2	1.5	1.5	1.5	1.5

Caution for piping

Refer to the diagram shown below for the sensor air exhaust port.

Mounting in blind hole
(Sensor air exhaust：side face)

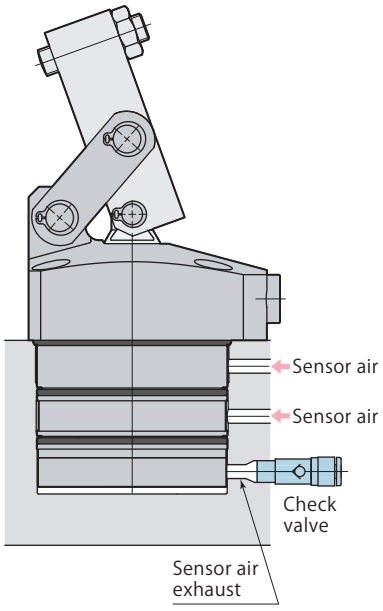

Mounting in blind hole
(Sensor air exhaust：bottom face)

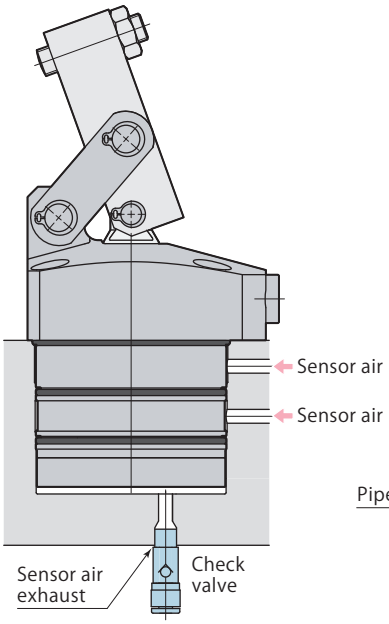

Mounting in through hole

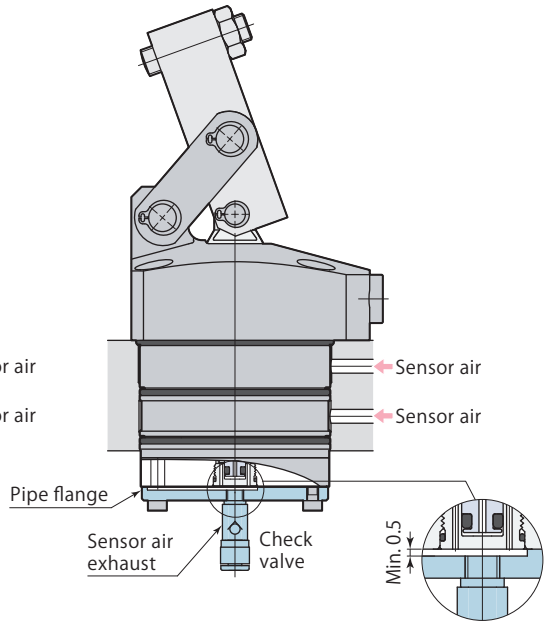

- Use a check valve with cracking pressure of 0.005 MPa or less if there is a risk of metal chips or coolant intrusion. Recommended check valve : AKH or AKB series manufactured by SMC.
- Furnish the piping by means of the pipe flange when mounting in a through hole. The flange is mountable with M3 threads at the bottom of the clamp. Be sure to provide an opening not to cover the exhaust port. See the sketch shown above.

Clamp PAL sensor function and structure

In the middle of clamp stroke

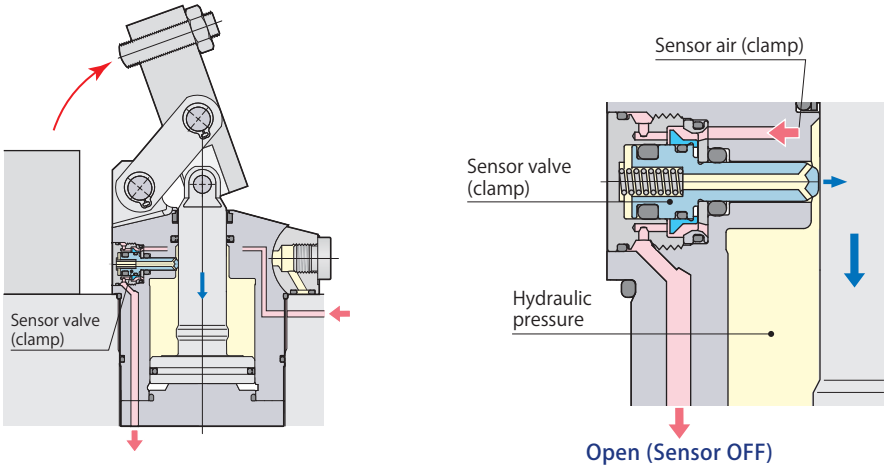

- The sensor valve (clamp) is pushed up by the hydraulic force to open for air exhaust while piston rod strokes.

Clamp detection

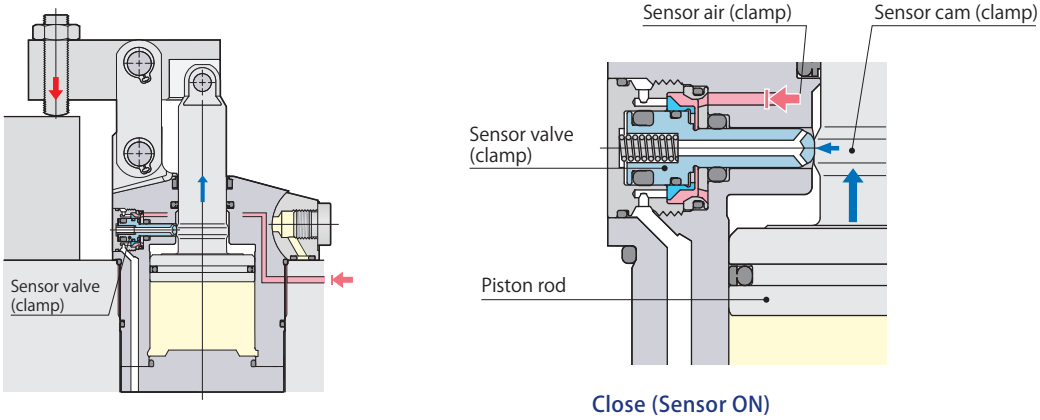

- The sensor valve (clamp) is pushed down by the sensor cam (clamp) and shuts off the sensor air flow when the piston rod reaches the clamping point, and detects the clamped condition.

Clamp PAL sensor function and structure

Over clamp stroke (Incomplete clamp) detection

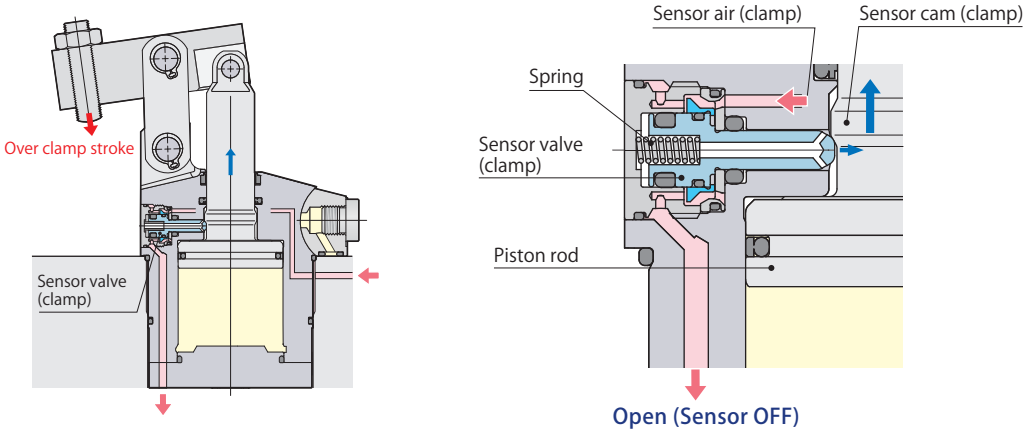

- The sensor cam passes the clamping point, the sensor valve (clamp) is pushed up by the spring and exhausts the sensor air, and detects the over clamp stroked condition.

Over clamp stroke (Incomplete clamp) detection example

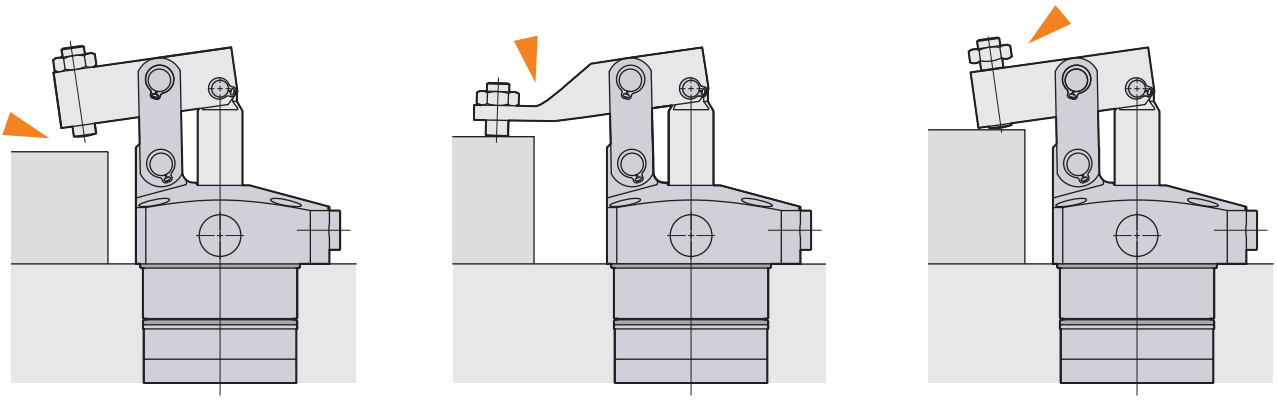

- Clamp disabled due to missetting workpiece.
- Clamp disabled due to the deflection of clamp arm.
- Clamp disabled due to the damage of piston rod or loose adjustment bolt.
- Clamp disabled due to the abrasion on the tip of clamp arm during prolonged use.

Clamp, Over clamp stroke detection signal

Unclamp

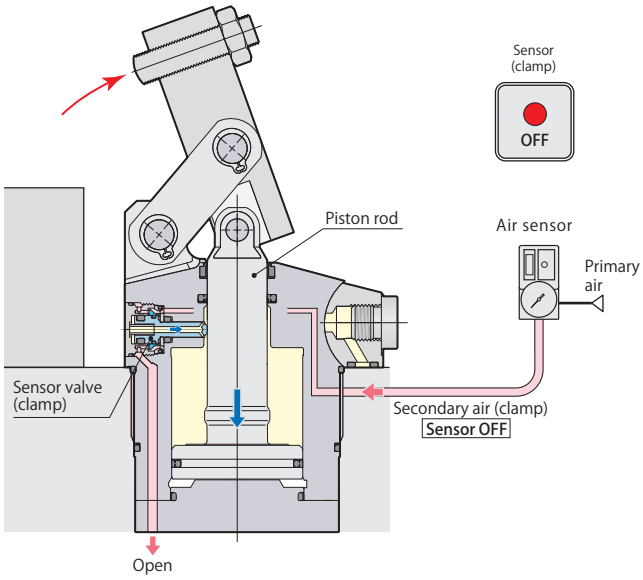

Sensor signal (clamp)	OFF	Unclamp

In the middle of clamp stroke

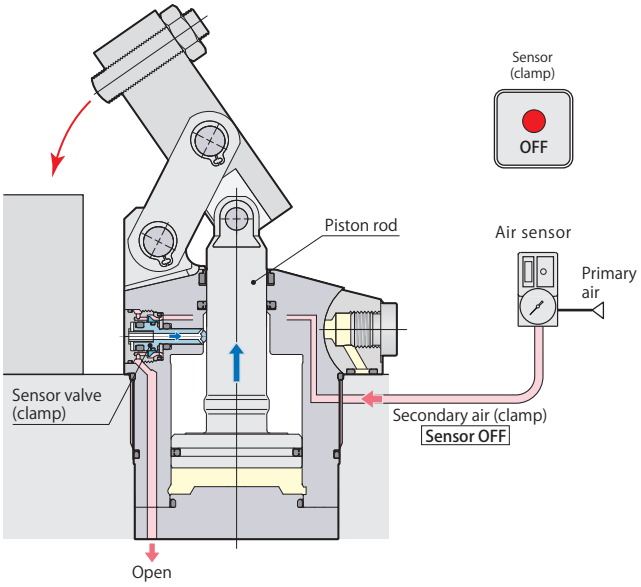

Sensor signal (clamp)	OFF	In the middle of clamp stroke

Clamp detection

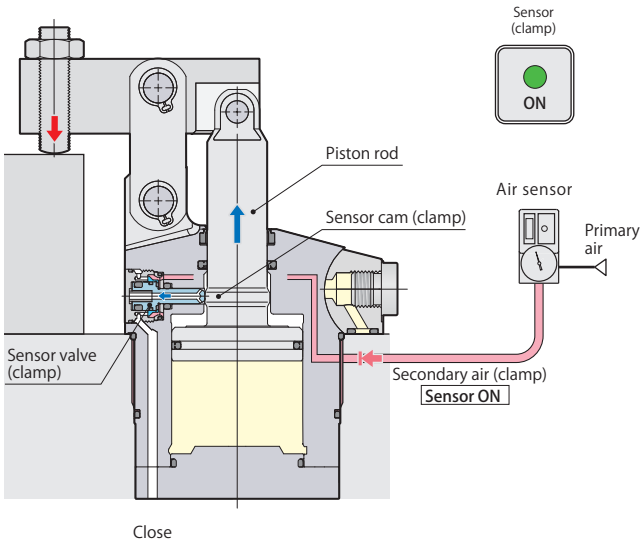

Sensor signal (clamp)	ON	Clamp

Over clamp stroke (Incomplete clamp) detection

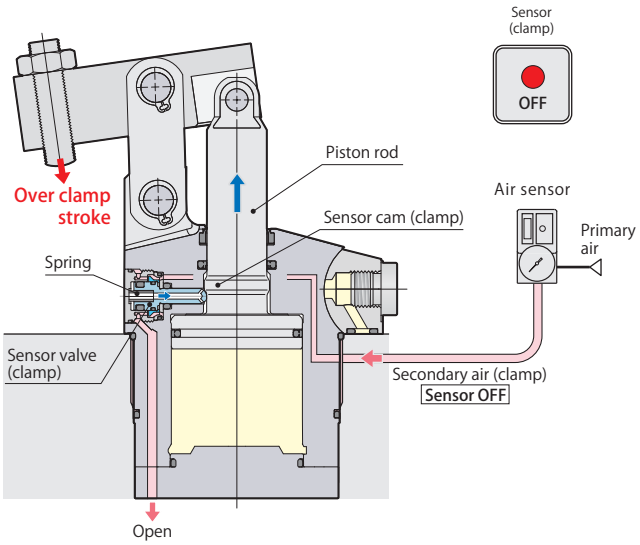

Sensor signal (clamp)	OFF	Over clamp stroke (Incomplete clamp)

Air sensor triggering point

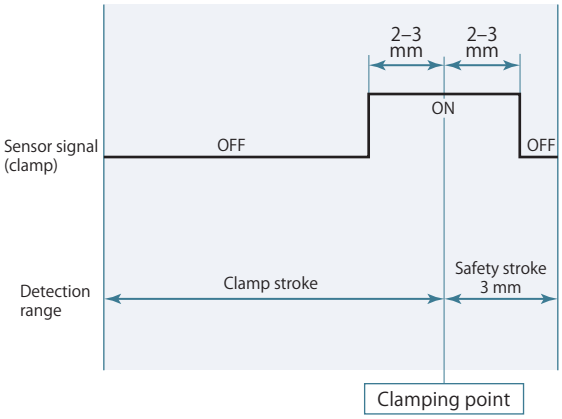

- Refer to the sensor supplier's instruction manual for the details of setting.
- Sensing performance such as detectable time and pressure differs depending on the supplier and model number of the sensor. Select the right model referring to sensor's application and characteristics.

Air sensor unit recommended condition of use

Supplier and model	ISA3-F/G series manufactured by SMC
	GPS2-05, GPS3-E series manufactured by CKD
Air supply pressure	0.1–0.2 MPa
Inner diameter of piping	ø4 mm (ISA3-F：ø2.5 mm)
Overall piping length	5 m or less

- Supply the dry and filtered air. Particulate size 5 μm or less is recommended.
- Use a solenoid valve with needle for air sensor unit and control it supplying air all the time in order to eliminate intrusion of chips or coolant.
- There is a case that air sensing cannot be successfully made as designed when it is used out of the above usage. Contact Technical service center for more details.

Relation between sensor air pressure, PAL sensor and piston stroke

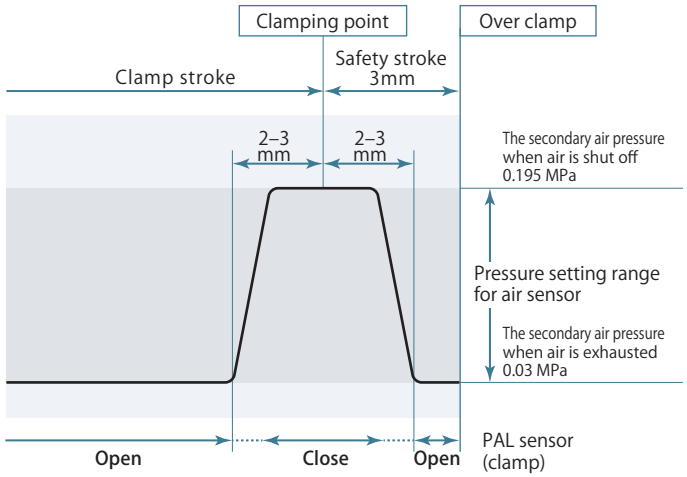

The diagram shown above indicates the relation between the PAL sensor, piston stroke, and secondary air pressure. (The pressure shown in the diagram is a reference based on the 0.2 MPa of primary air pressure for one piece of clamp.)

Since the new PAL sensor works with less air-leakage compared to previous sensor valve,

- Enhances the pressure setting range of the sensor which enables the sensor to set easily. (Ex. Pressure setting range 0.03–0.195 MPa in the diagram)
- Allows the use for a number of clamps by one air sensor because of better pressure holding when air is shut off. (Maximum number of clamps to be detected by one sensor is 10.)
- Allows to choose less air-consumed, i.e. small orifice diameter type, air sensor.
- Can create large differential-pressure when opening and closing the PAL sensor so that sensor primary pressure can be set as low as possible and reduce the consumption of air.

New PAL sensor

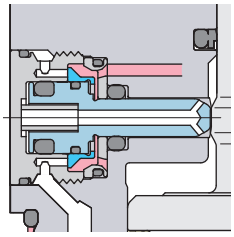

Poppet structure ensures superior sealing performance and can create large differential-pressure when the valve is opening and closing, and air leakage can be minimized.

Previous sensor valve

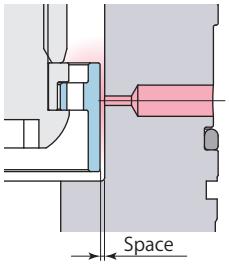

Air leaks easily due to a large space.

Dimensions

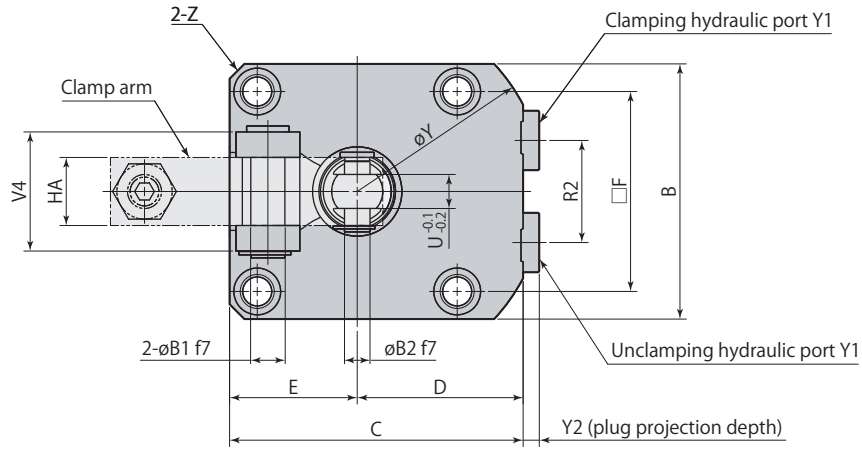

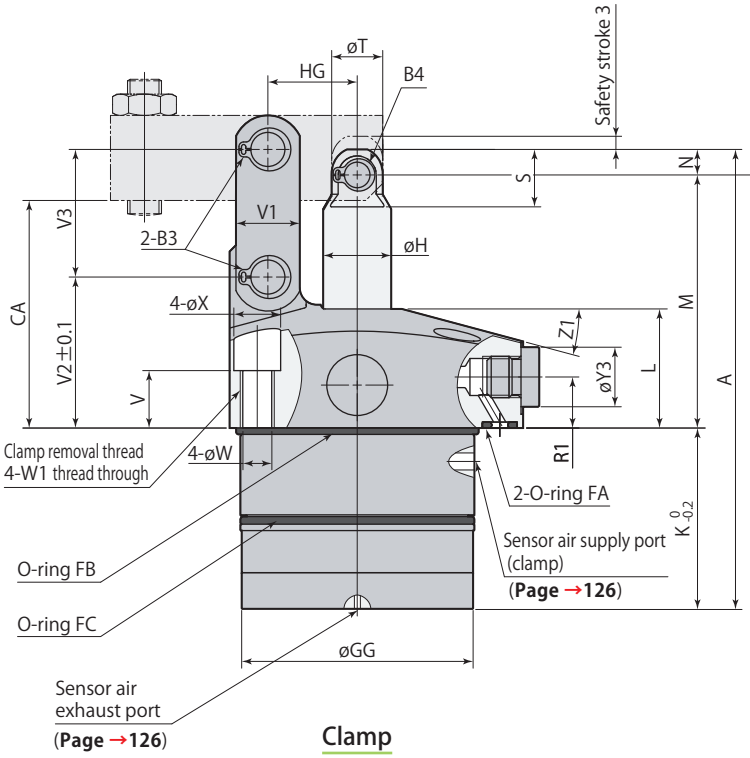

Clamp

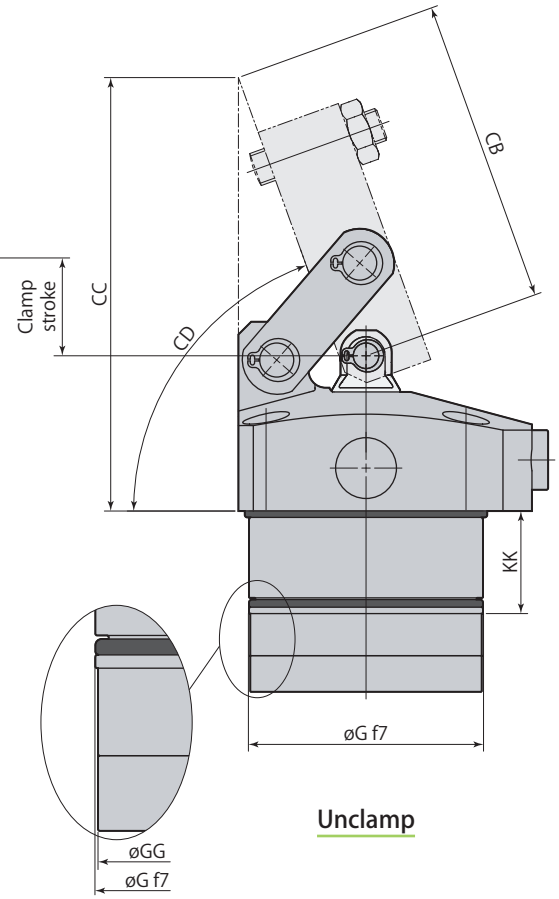

Unclamp

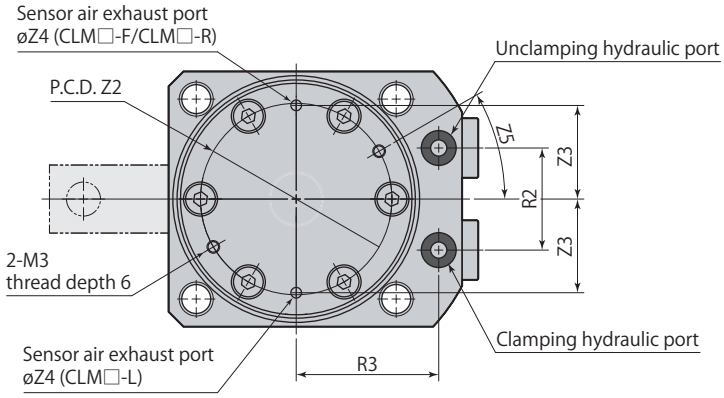

- This diagram represents external contour of CLM□-F. CLM□-L and CLM□-R differ only in terms of mounting direction of clamp arm and otherwise all dimensions are identical to those of CLM□-F.

L:Left side F:Front side R:Right side

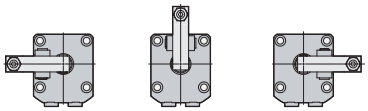

- Clamp arm and mounting screws are not included.

mm

Model	CLM04-□C	CLM05-□C	CLM06-□C	CLM10-□C	CLM16-□C
A	96	106	108	124	139.5
B	45	51	60	70	85
C	54	61	69	81	94.5
D	31.5	35.5	39	46	52
E	22.5	25.5	30	35	42.5
F	34	40	47	55	63
øG	$40^{-0.025}_{-0.050}$	$48^{-0.025}_{-0.050}$	$55^{-0.030}_{-0.060}$	$65^{-0.030}_{-0.060}$	$75^{-0.030}_{-0.060}$
øGG	39.4	47.4	54.4	64.4	74.4
øH	12	14	16	20	22
K	40.5	43	42.5	49	47.5
KK	19.5	21	23.5	25	25
L	25	28	28	30	37
M	50	57	59.5	67	82
N	5.5	6	6	8	10
R1	11	12	12	13	16
R2	18	22	24	30	32
R3	26	30	33.5	39.5	45
S	12.5	13.5	13.5	17.5	22
øT	11	12	12	15	19
U (width across flats)	6	6	8	10	11
V	15.5	16.5	13.5	15.5	17.5
V1	11	13	15	19	25
V2	30.5	34.5	35.5	39	48
V3	22	26	30	35.5	43.5
V4	21	21	28	37	40
øW	5.5	5.5	6.8	6.8	9
W1	M6×1	M6×1	M8×1.25	M8×1.25	M10×1.5
øX	9.5	9.5	11	11	14
øY	72	81	88	106	116
Y1	G1/8	G1/8	G1/8	G1/8	G1/4
Y2	3.8	3.8	3.8	3.8	4.8
øY3	14	14	14	14	19
Z	C3	C3	C3.5	C4.5	C10
Z1	15°	15°	15°	12°	15°
Z2	32	38	45	53.5	65
Z3	16	19.5	22	27.5	32.5
Z4	2.5	2.5	2.5	3.3	3.3
Z5	30°	30°	30°	30°	10°
øB1	$6^{-0.010}_{-0.022}$	$6^{-0.010}_{-0.022}$	$8^{-0.013}_{-0.028}$	$10^{-0.013}_{-0.028}$	$12^{-0.016}_{-0.034}$
øB2	$6^{-0.010}_{-0.022}$	$6^{-0.010}_{-0.022}$	$6^{-0.010}_{-0.022}$	$8^{-0.013}_{-0.028}$	$10^{-0.013}_{-0.028}$
B3 (snap ring)*1	STW-6	STW-6	STW-8	STW-10	STW-12
B4 (snap ring)*1	STW-6	STW-6	STW-6	STW-8	STW-10
CA	44.5	51	53.5	59	72
CB	50.2	61.2	71.7	78.7	90.8
CC	77.7	92.4	101.9	111.4	130.8
CD	About 70°	About 71°	About 70°	About 70°	About 69°
HA	12	12	16	19	22
HG	16	18.5	21	24.5	30
O-ring FA (fluorocarbon hardness Hs90)	P5	P5	P5	P7	P7
O-ring FB (fluorocarbon hardness Hs70)	AS568-029	AS568-031	AS568-034	AS568-037	AS568-040
O-ring FC (fluorocarbon hardness Hs70)	AS568-028	AS568-031	AS568-033	AS568-036	AS568-039
Flow control valve*2 Meter-in	VCF01S	VCF01	VCF01	VCF01	VCF02
Flow control valve*2 Meter-out	VCF01S-O	VCF01-O	VCF01-O	VCF01-O	VCF02-O
Air bleeding valve*2	VCE01	VCE01	VCE01	VCE01	VCE02

*1: Snap ring is made by Ochiai Corporation.

*2: Select the right model of VCF and VCE according to the size of the clamp.

Refer to each page for the details of options. Flow control valve **page →164** Air bleeding valve **page →166**

Mounting details

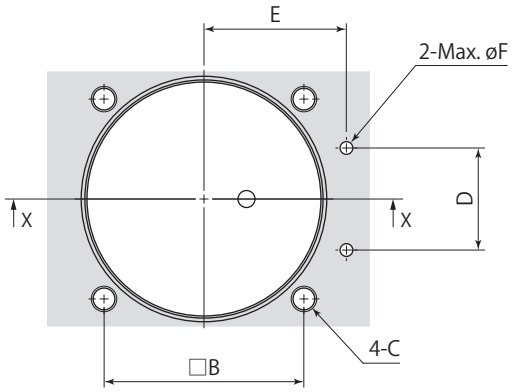

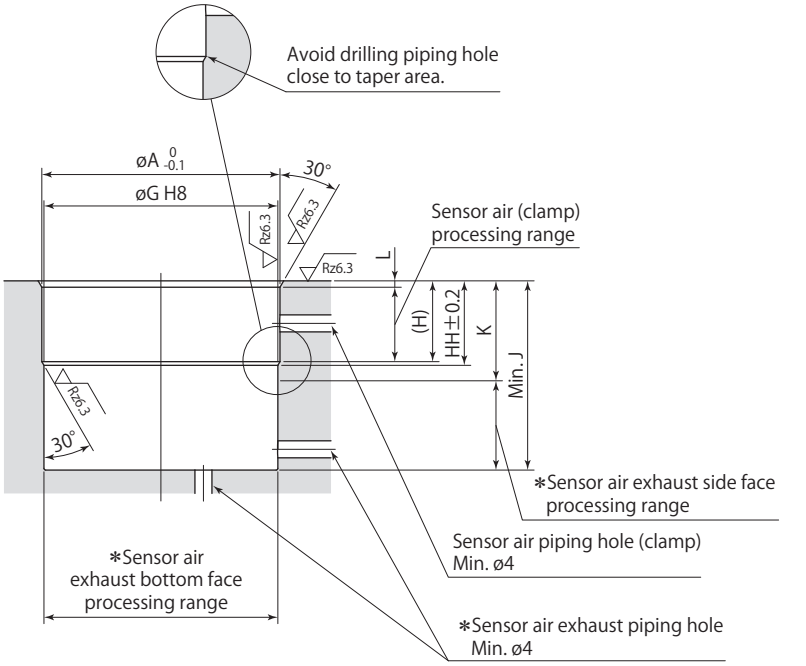

In blind hole X-X

*: Sensor air exhaust piping hole must be made on either side or bottom face.

Rz: ISO4287(1997)

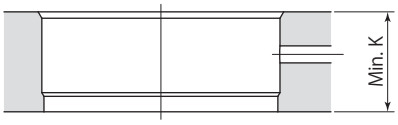

In through hole X-X

- Apply an appropriate amount of grease to the chamfer and the bore when mounting. Excessive grease may be a blockage in the air passage, causing malfunction of the sensor.
- The 30° taper machining must be provided to avoid the damage of the O-ring. Ensure that there are no interference on taper area when drilling the hole for sensor air.

Mounting details

mm

Model	CLM04-□C	CLM05-□C	CLM06-□C	CLM10-□C	CLM16-□C
øA	40.8	49	56	66	76
B	34	40	47	55	63
C	M5	M5	M6	M6	M8
D	18	22	24	30	32
E	26	30	33.5	39.5	45
øF	3	3	3	5	5
øG	$40^{+0.039}_{0}$	$48^{+0.039}_{0}$	$55^{+0.046}_{0}$	$65^{+0.046}_{0}$	$75^{+0.046}_{0}$
H	15	16.5	19	20.5	20.5
HH	15.7	17.4	19.9	21.4	21.4
J	41	43.5	43	49.5	48
K	19.5	21	23.5	25	25
L	1.2	1.5	1.5	1.5	1.5

Caution for piping

Refer to the diagram shown below for the sensor air exhaust port.

Mounting in blind hole
(Sensor air exhaust：side face)

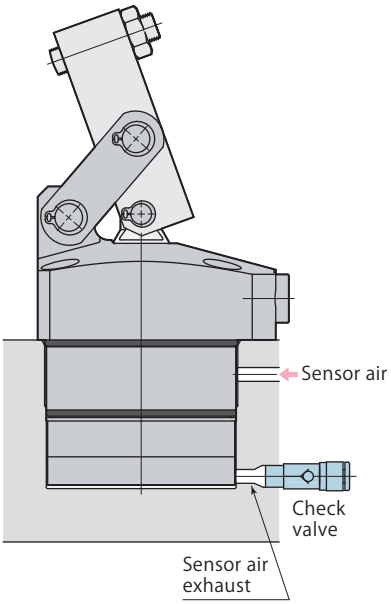

Mounting in blind hole
(Sensor air exhaust：bottom face)

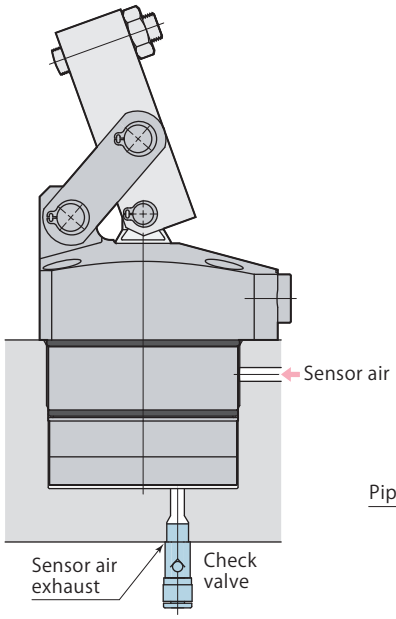

Mounting in through hole

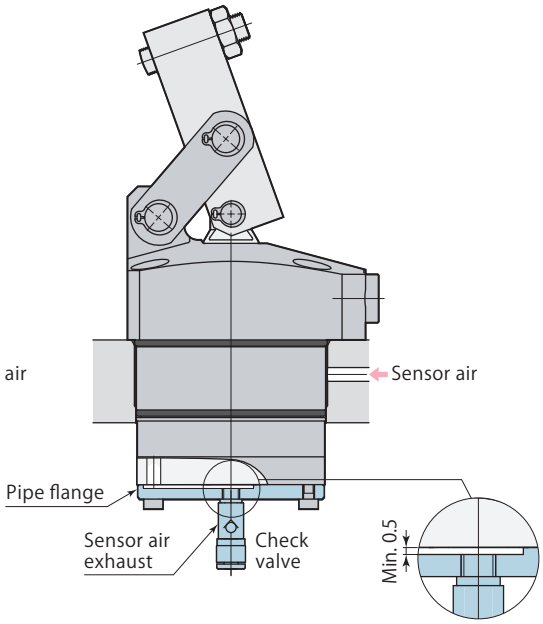

- Use a check valve with cracking pressure of 0.005 MPa or less if there is a risk of metal chips or coolant intrusion. Recommended check valve : AKH or AKB series manufactured by SMC.
- Furnish the piping by means of the pipe flange when mounting in a through hole. The flange is mountable with M3 threads at the bottom of the clamp. Be sure to provide an opening not to cover the exhaust port. See the sketch shown above.

Unclamp PAL sensor function and structure

Unclamp detection

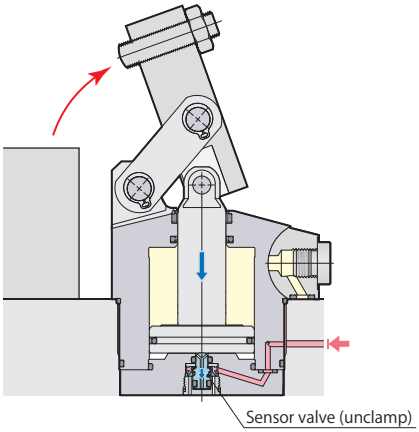

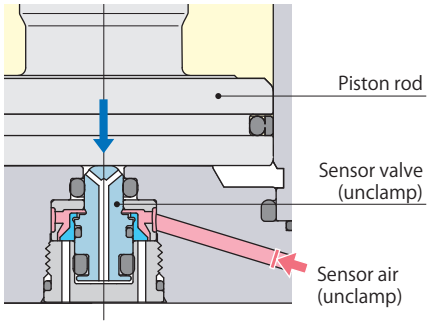

Close (Sensor ON)

- The sensor valve (unclamp) is pushed down by the piston rod and shuts off the sensor air flow when the piston rod reaches the unclamp end, and detects the unclamped condition.

In the middle of clamp stroke

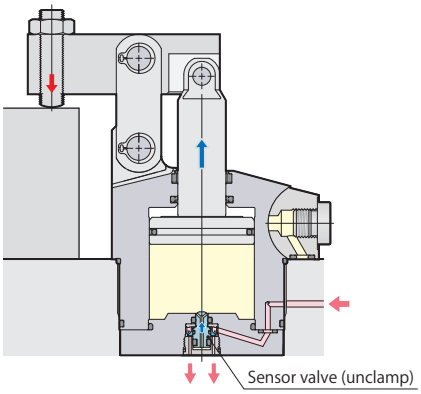

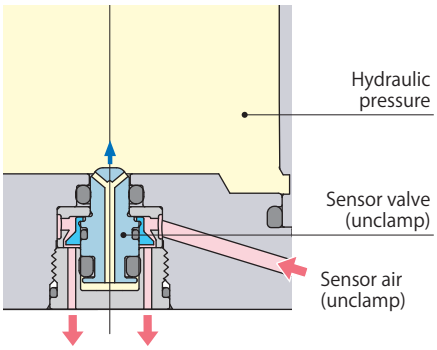

Open (Sensor OFF)

- The sensor valve (unclamp) is pushed up by the hydraulic force to open for air exhaust while piston rod strokes.

Unclamp detection signal

Unclamp detection

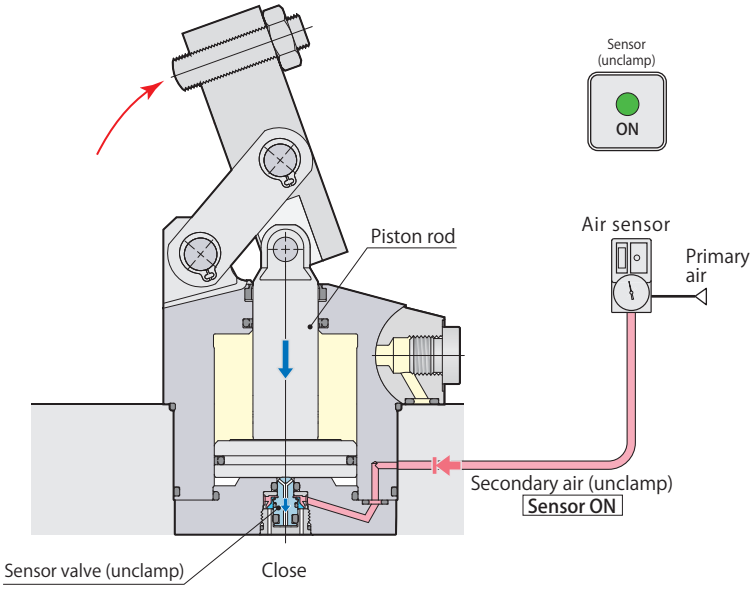

The sensor may not work correctly when the cylinder is not pressurized by hydraulic force because the piston of the clamp moves under such environment. Keep supplying hydraulic force the cylinder all the times.

Sensor signal (unclamp)	ON	Unclamp

In the middle of clamp stroke

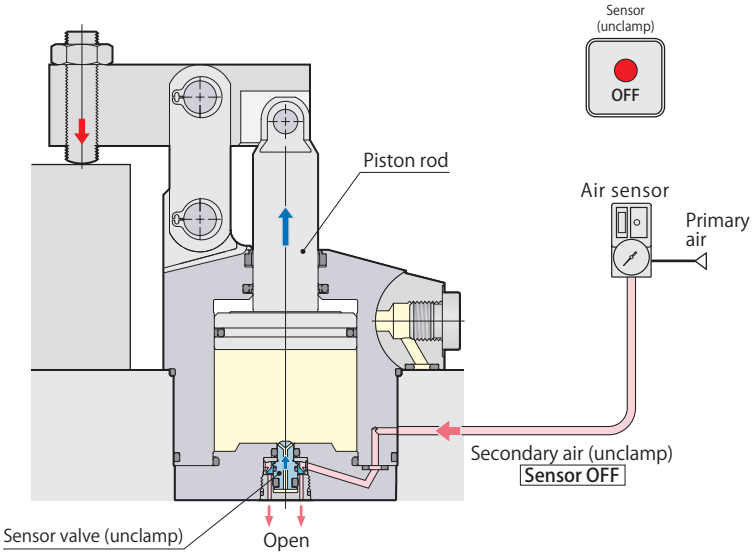

Sensor signal (unclamp)	OFF	Clamp, in the middle of clamp stroke

More than 1.5MPa hydraulic pressure is required to operate the sensor valve. To obtain OFF signal in the middle of the valve stroke, over 1.5MPa of back pressure should be produced by using a meter-out type of flow control valve.

Air sensor triggering point

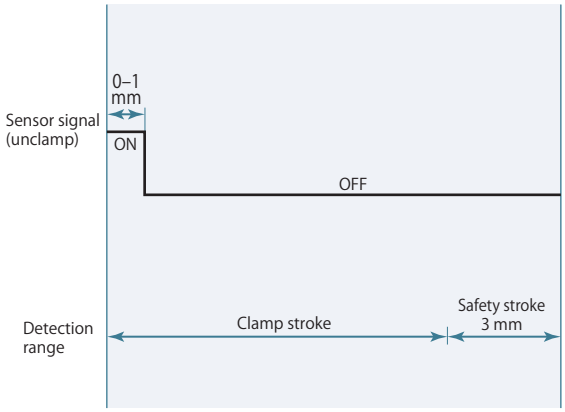

- Refer to the sensor supplier's instruction manual for the details of setting.
- Sensing performance such as detectable time and pressure differs depending on the supplier and model number of the sensor. Select the right model referring to sensor's application and characteristics.

Air sensor unit recommended condition of use

Supplier and model	ISA3-F/G series manufactured by SMC
	GPS2-05, GPS3-E series manufactured by CKD
Air supply pressure	0.1–0.2 MPa
Inner diameter of piping	ø4 mm (ISA3-F：ø2.5 mm)
Overall piping length	5 m or less

- Supply the dry and filtered air. Particulate size 5 μm or less is recommended.
- Use a solenoid valve with needle for air sensor unit and control it supplying air all the time in order to eliminate intrusion of chips or coolant.
- There is a case that air sensing cannot be successfully made as designed when it is used out of the above usage. Contact Technical service center for more details.

Relation between sensor air pressure, PAL sensor and piston stroke

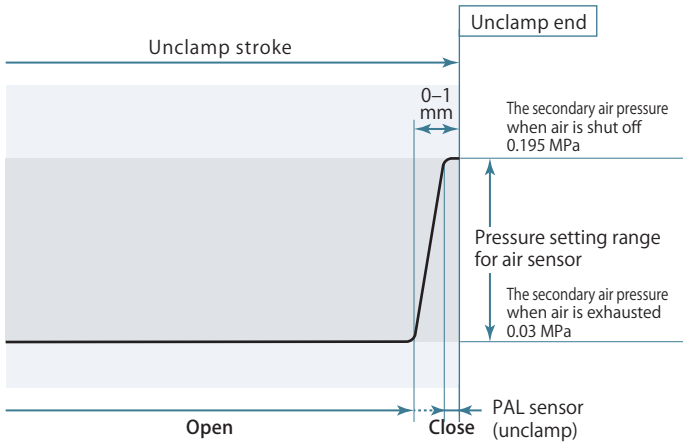

The diagram shown above indicates the relation between the PAL sensor, piston stroke, and secondary air pressure. (The pressure shown in the diagram is a reference based on the 0.2 MPa of primary air pressure for one piece of clamp.)

Since the new PAL sensor works with less air-leakage compared to previous sensor valve,

- Enhances the pressure setting range of the sensor which enables the sensor to set easily.
  (Ex. Pressure setting range 0.03–0.195 MPa in the diagram)
- Allows the use for a number of clamps by one air sensor because of better pressure holding when air is shut off. (Maximum number of clamps to be detected by one sensor is 10.)
- Allows to choose less air-consumed, i.e. small orifice diameter type, air sensor.
- Can create large differential-pressure when opening and closing the PAL sensor so that sensor primary pressure can be set as low as possible and reduce the consumption of air.

New PAL sensor

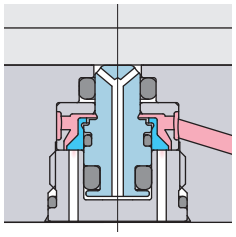

Poppet structure ensures superior sealing performance and can create large differential-pressure when the valve is opening and closing, and air leakage can be minimized.

Previous sensor valve

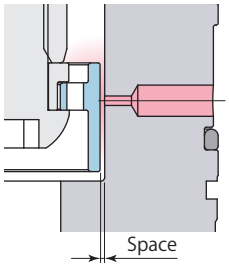

Air leaks easily due to a large space.

Dimensions

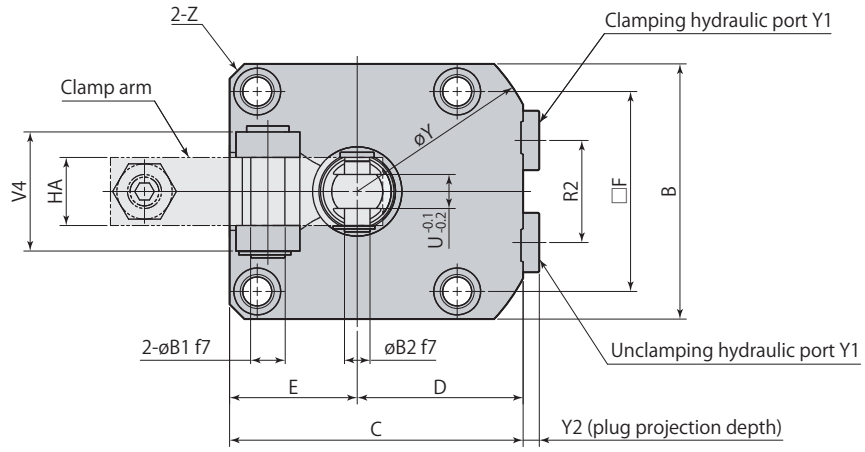

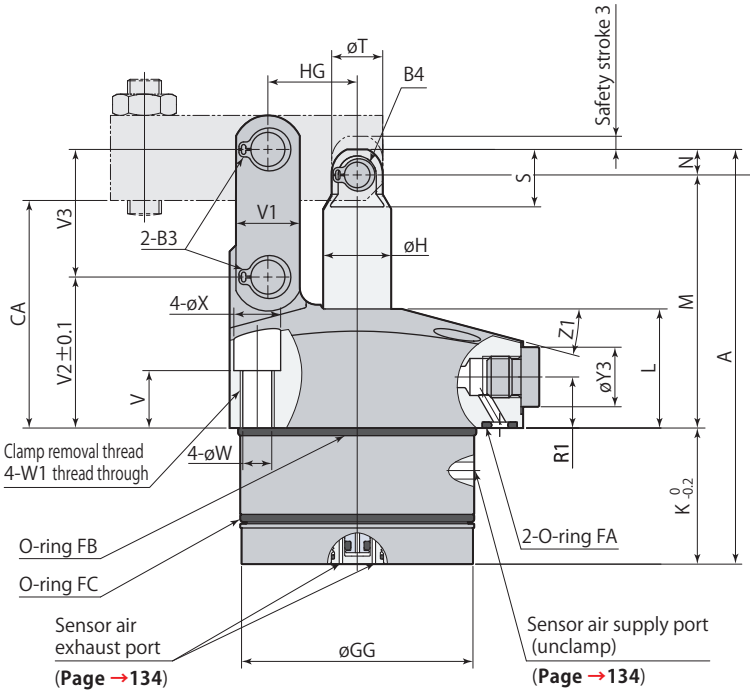

Clamp

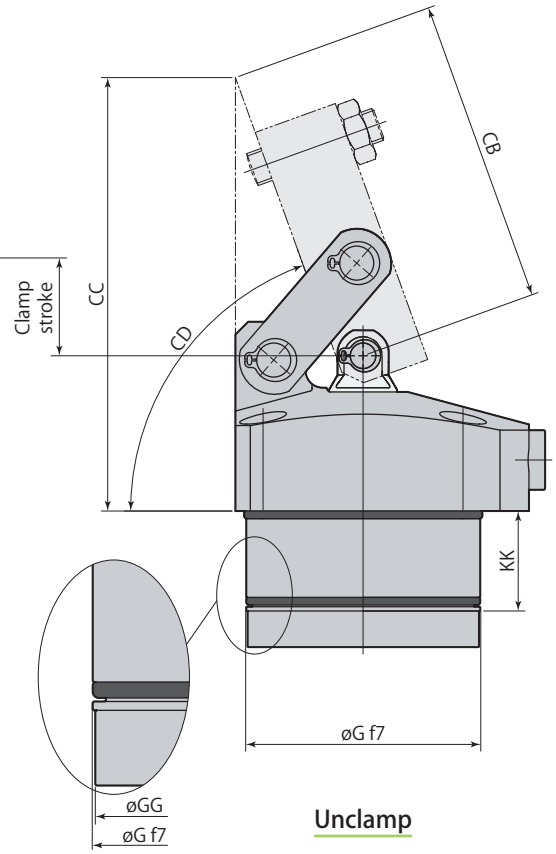

Unclamp

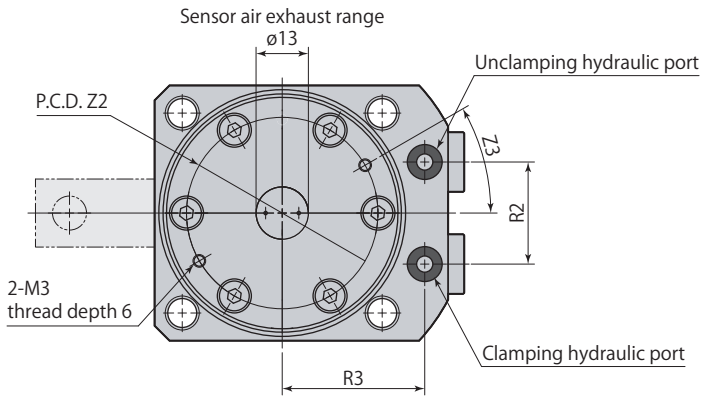

- This diagram represents external contour of CLM□-F. CLM□-L and CLM□-R differ only in terms of mounting direction of clamp arm and otherwise all dimensions are identical to those of CLM□-F.

L:Left side F:Front side R:Right side

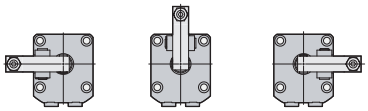

- Clamp arm and mounting screws are not included.

mm

Model	CLM04-□B	CLM05-□B	CLM06-□B	CLM10-□B	CLM16-□B
A	83	92.5	97.5	113.5	132.5
B	45	51	60	70	85
C	54	61	69	81	94.5
D	31.5	35.5	39	46	52
E	22.5	25.5	30	35	42.5
F	34	40	47	55	63
øG	$40^{-0.025}_{-0.050}$	$48^{-0.025}_{-0.050}$	$55^{-0.030}_{-0.060}$	$65^{-0.030}_{-0.060}$	$75^{-0.030}_{-0.060}$
øGG	39.4	47.4	54.4	64.4	74.4
øH	12	14	16	20	22
K	27.5	29.5	32	38.5	40.5
KK	19.5	21	23.5	25	25
L	25	28	28	30	37
M	50	57	59.5	67	82
N	5.5	6	6	8	10
R1	11	12	12	13	16
R2	18	22	24	30	32
R3	26	30	33.5	39.5	45
S	12.5	13.5	13.5	17.5	22
øT	11	12	12	15	19
U (width across flats)	6	6	8	10	11
V	15.5	16.5	13.5	15.5	17.5
V1	11	13	15	19	25
V2	30.5	34.5	35.5	39	48
V3	22	26	30	35.5	43.5
V4	21	21	28	37	40
øW	5.5	5.5	6.8	6.8	9
W1	M6×1	M6×1	M8×1.25	M8×1.25	M10×1.5
øX	9.5	9.5	11	11	14
øY	72	81	88	106	116
Y1	G1/8	G1/8	G1/8	G1/8	G1/4
Y2	3.8	3.8	3.8	3.8	4.8
øY3	14	14	14	14	19
Z	C3	C3	C3.5	C4.5	C10
Z1	15°	15°	15°	12°	15°
Z2	32	38	45	53.5	65
Z3	30°	30°	30°	30°	10°
øB1	$6^{-0.010}_{-0.022}$	$6^{-0.010}_{-0.022}$	$8^{-0.013}_{-0.028}$	$10^{-0.013}_{-0.028}$	$12^{-0.016}_{-0.034}$
øB2	$6^{-0.010}_{-0.022}$	$6^{-0.010}_{-0.022}$	$6^{-0.010}_{-0.022}$	$8^{-0.013}_{-0.028}$	$10^{-0.013}_{-0.028}$
B3 (snap ring)*1	STW-6	STW-6	STW-8	STW-10	STW-12
B4 (snap ring)*1	STW-6	STW-6	STW-6	STW-8	STW-10
CA	44.5	51	53.5	59	72
CB	50.2	61.2	71.7	78.7	90.8
CC	77.7	92.4	101.9	111.4	130.8
CD	About 70°	About 71°	About 70°	About 70°	About 69°
HA	12	12	16	19	22
HG	16	18.5	21	24.5	30
O-ring FA (fluorocarbon hardness Hs90)	P5	P5	P5	P7	P7
O-ring FB (fluorocarbon hardness Hs70)	AS568-029	AS568-031	AS568-034	AS568-037	AS568-040
O-ring FC (fluorocarbon hardness Hs70)	AS568-028	AS568-031	AS568-033	AS568-036	AS568-039
Flow control valve*2 Meter-in	VCF01S	VCF01	VCF01	VCF01	VCF02
Flow control valve*2 Meter-out	VCF01S-O	VCF01-O	VCF01-O	VCF01-O	VCF02-O
Air bleeding valve*2	VCE01	VCE01	VCE01	VCE01	VCE02

*1: Snap ring is made by Ochiai Corporation.

*2: Select the right model of VCF and VCE according to the size of the clamp.

Refer to each page for the details of options. ● Flow control valve **page →164** ● Air bleeding valve **page →166**

Mounting details

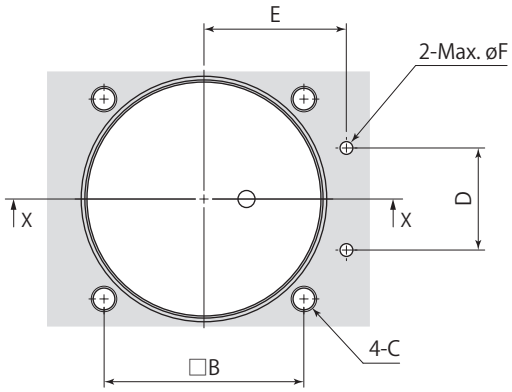

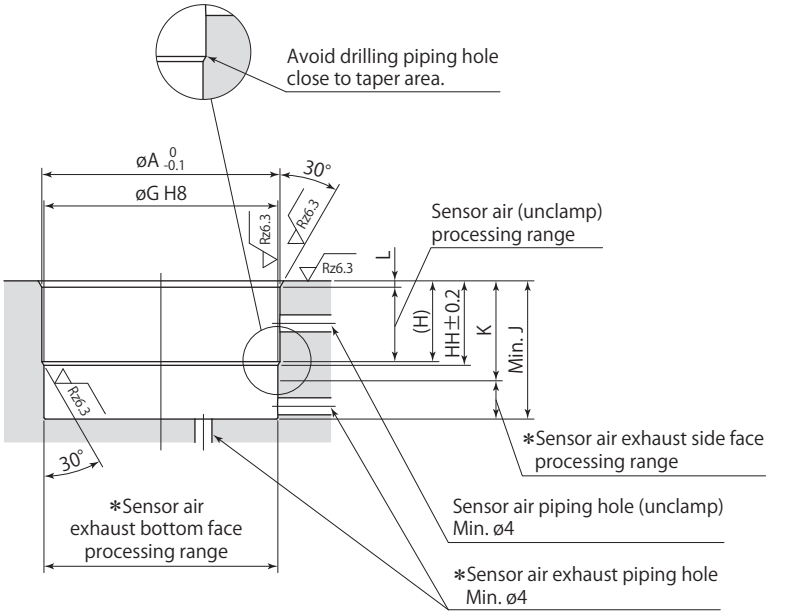

In blind hole X-X

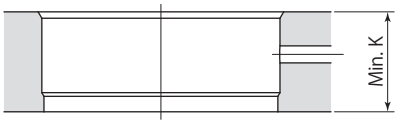

In through hole X-X

*: Sensor air exhaust piping hole must be made on either side or bottom face.

Rz: ISO4287(1997)

- Apply an appropriate amount of grease to the chamfer and the bore when mounting. Excessive grease may be a blockage in the air passage, causing malfunction of the sensor.
- The 30° taper machining must be provided to avoid the damage of the O-ring. Ensure that there are no interference on taper area when drilling the hole for sensor air.

Mounting details

mm

Model	CLM04-□B	CLM05-□B	CLM06-□B	CLM10-□B	CLM16-□B
øA	40.8	49	56	66	76
B	34	40	47	55	63
C	M5	M5	M6	M6	M8
D	18	22	24	30	32
E	26	30	33.5	39.5	45
øF	3	3	3	5	5
øG	$40^{+0.039}_{0}$	$48^{+0.039}_{0}$	$55^{+0.046}_{0}$	$65^{+0.046}_{0}$	$75^{+0.046}_{0}$
H	15	16.5	19	20.5	20.5
HH	15.7	17.4	19.9	21.4	21.4
J	28	30	32.5	39	41
K	19.5	21	23.5	25	25
L	1.2	1.5	1.5	1.5	1.5

Caution for piping

Refer to the diagram shown below for the sensor air exhaust port.

Mounting in blind hole
(Sensor air exhaust：side face)

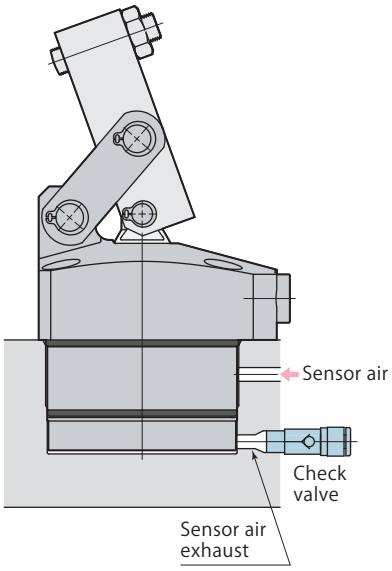

Mounting in blind hole
(Sensor air exhaust：bottom face)

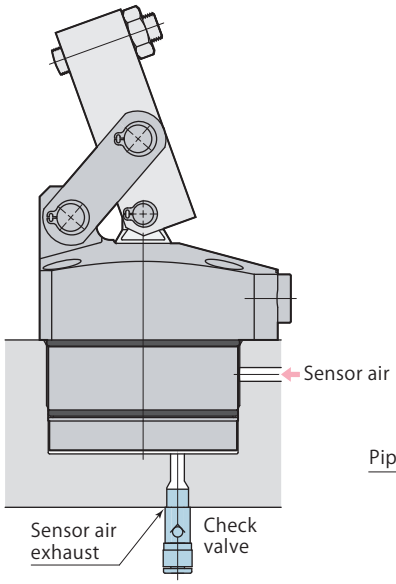

Mounting in through hole

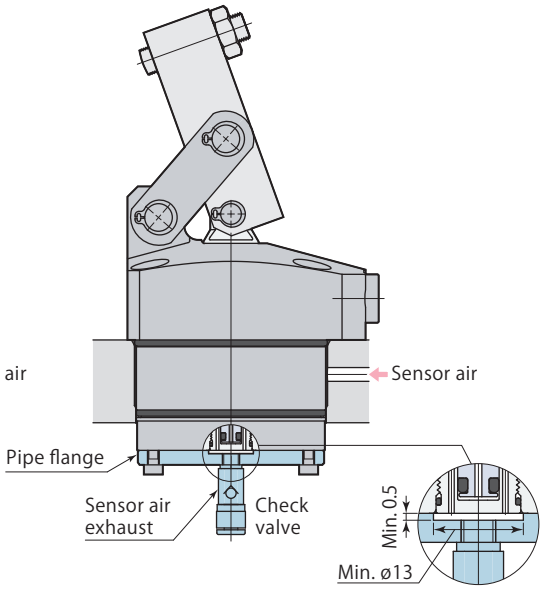

- Use a check valve with cracking pressure of 0.005 MPa or less if there is a risk of metal chips or coolant intrusion. Recommended check valve : AKH or AKB series manufactured by SMC.
- Furnish the piping by means of the pipe flange when mounting in a through hole. The flange is mountable with M3 threads at the bottom of the clamp. Be sure to provide an opening not to cover the exhaust port. See the sketch shown above.

Dimensions

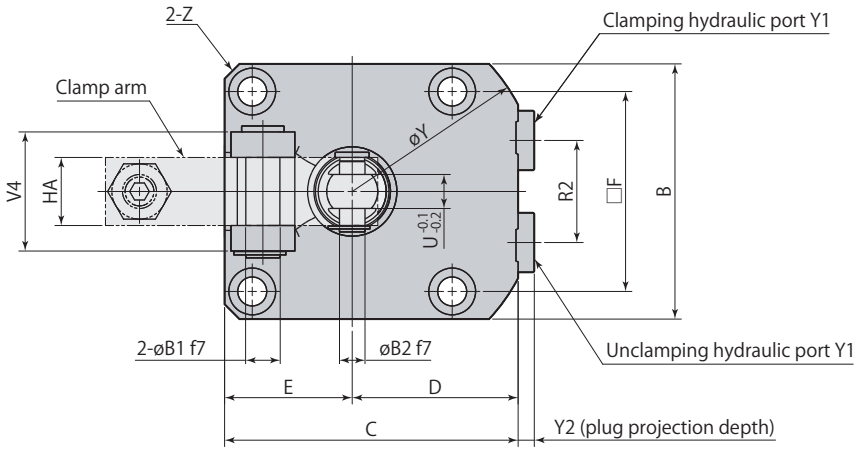

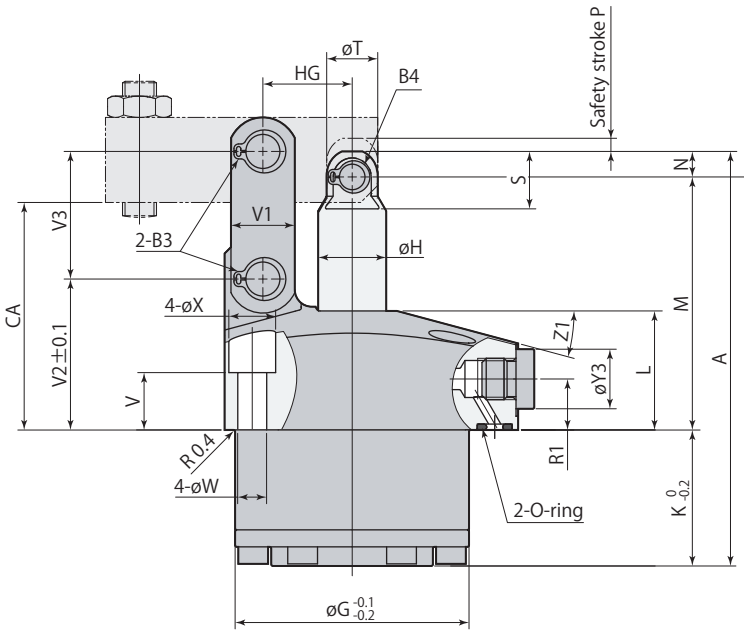

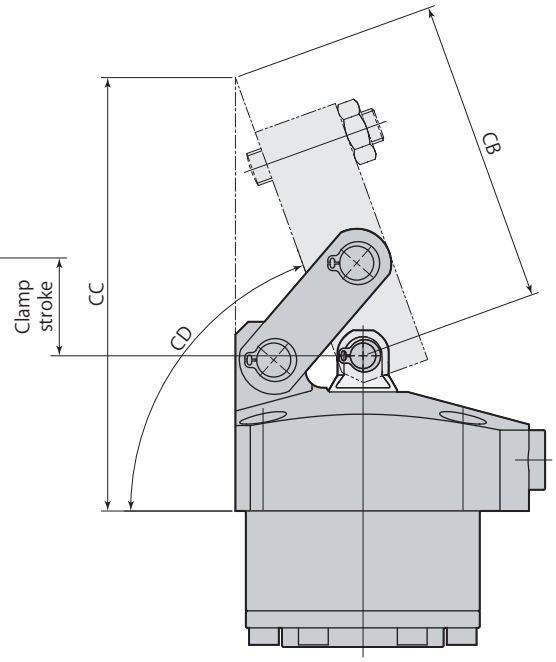

Clamp

Unclamp

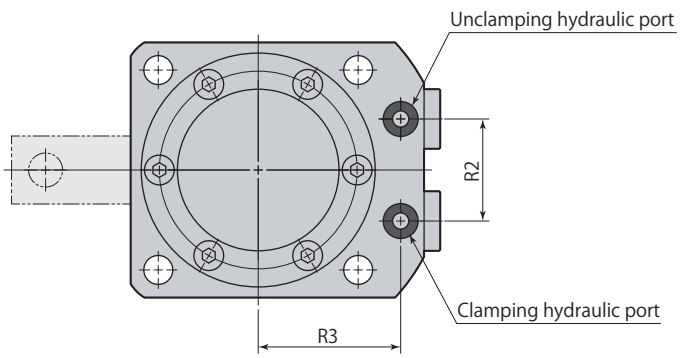

- This diagram represents external contour of CLM□-F. CLM□-L and CLM□-R differ only in terms of mounting direction of clamp arm and otherwise all dimensions are identical to those of CLM□-F.

L:Left side F:Front side R:Right side

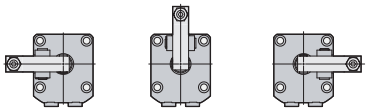

- Clamp arm and mounting screws are not included.

mm

Model	CLM03-□N	CLM04-□N	CLM05-□N	CLM06-□N	CLM10-□N	CLM16-□N
A	75	83	92.5	97.5	113.5	132.5
B	40	45	51	60	70	85
C	49	54	61	69	81	94.5
D	29	31.5	35.5	39	46	52
E	20	22.5	25.5	30	35	42.5
F	31.4	34	40	47	55	63
øG	36	40	48	55	65	75
øH	10	12	14	16	20	22
K	23	27.5	29.5	32	38.5	40.5
L	25	25	28	28	30	37
M	47.5	50	57	59.5	67	82
N	4.5	5.5	6	6	8	10
P	2.5	3	3	3	3	3
R1	11	11	12	12	13	16
R2	16	18	22	24	30	32
R3	23.5	26	30	33.5	39.5	45
S	10.5	12.5	13.5	13.5	17.5	22
øT	9	11	12	12	15	19
U (width across flats)	5	6	6	8	10	11
V	15.5	15.5	16.5	13.5	15.5	17.5
V1	11	11	13	15	19	25
V2	30	30.5	34.5	35.5	39	48
V3	20	22	26	30	35.5	43.5
V4	19	21	21	28	37	40
øW	4.5	5.5	5.5	6.8	6.8	9
øX	7.5	9.5	9.5	11	11	14
øY	66	72	81	88	106	116
Y1	G1/8	G1/8	G1/8	G1/8	G1/8	G1/4
Y2	3.8	3.8	3.8	3.8	3.8	4.8
øY3	14	14	14	14	14	19
Z	C2	C3	C3	C3.5	C4.5	C10
Z1	15°	15°	15°	15°	12°	15°
øB1	$5^{-0.010}_{-0.022}$	$6^{-0.010}_{-0.022}$	$6^{-0.010}_{-0.022}$	$8^{-0.013}_{-0.028}$	$10^{-0.013}_{-0.028}$	$12^{-0.016}_{-0.034}$
øB2	$5^{-0.010}_{-0.022}$	$6^{-0.010}_{-0.022}$	$6^{-0.010}_{-0.022}$	$6^{-0.010}_{-0.022}$	$8^{-0.013}_{-0.028}$	$10^{-0.013}_{-0.028}$
B3 (snap ring)*1	STW-5	STW-6	STW-6	STW-8	STW-10	STW-12
B4 (snap ring)*1	STW-5	STW-6	STW-6	STW-6	STW-8	STW-10
CA	43	44.5	51	53.5	59	72
CB	47.2	50.2	61.2	71.7	78.7	90.8
CC	74.3	77.7	92.4	101.9	111.4	130.8
CD	About 70.4°	About 70°	About 71°	About 70°	About 70°	About 69°
HA	10	12	12	16	19	22
HG	14.5	16	18.5	21	24.5	30
O-ring (fluorocarbon hardness Hs90)	P5	P5	P5	P5	P7	P7
Flow control valve*2 Meter-in	VCF01S	VCF01S	VCF01	VCF01	VCF01	VCF02
Flow control valve*2 Meter-out	VCF01S-O	VCF01S-O	VCF01-O	VCF01-O	VCF01-O	VCF02-O
Air bleeding valve*2	VCE01	VCE01	VCE01	VCE01	VCE01	VCE02

*1: Snap ring is made by Ochiai Corporation.

*2: Select the right model of VCF and VCE according to the size of the clamp.

Refer to each page for the details of options. ● Flow control valve **page →164** ● Air bleeding valve **page →166**

Mounting details

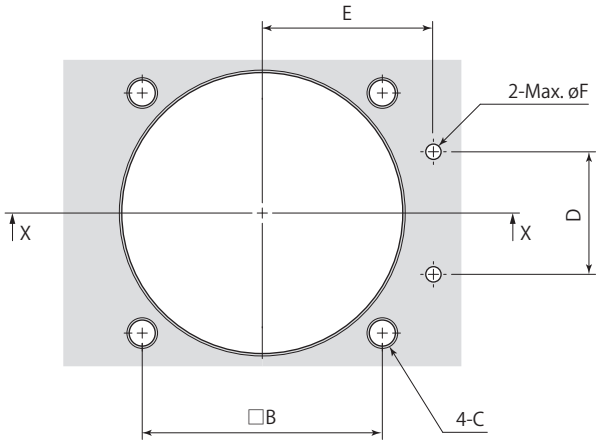

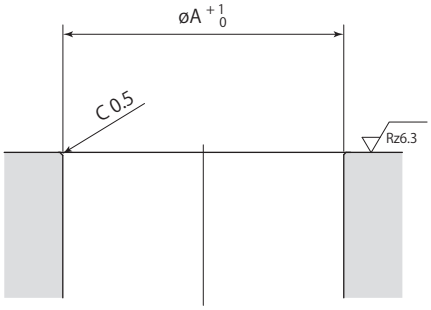

X-X

Rz: ISO4287(1997)

mm

Model	CLM03-□N	CLM04-□N	CLM05-□N	CLM06-□N	CLM10-□N	CLM16-□N
øA	36	40	48	55	65	75
B	31.4	34	40	47	55	63
C	M4	M5	M5	M6	M6	M8
D	16	18	22	24	30	32
E	23.5	26	30	33.5	39.5	45
øF	3	3	3	3	5	5

Clamp arm mounting details

Clamp arm is not included. Manufacture a clamp arm with the dimensions shown in the table below.

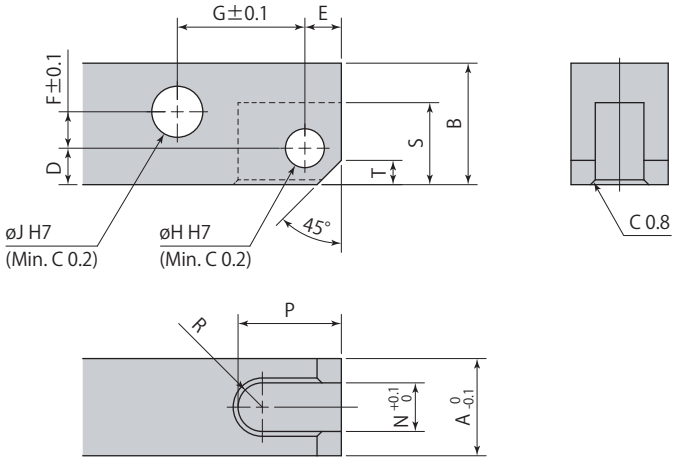

Recommended material：S45C (HB167–229)

mm

Link clamp	CLM03	CLM04	CLM05	CLM06	CLM10	CLM16
A	10	12	12	16	19	22
B	12.5	14	16	20	25	32
D	4.5	5.5	6	6	8	10
E	4.5	5.5	6	6	7	10
F	2.5	2.5	3.5	6	7.5	9.5
G	14.5	16	18.5	21	24.5	30
øH	$5^{+0.012}_{0}$	$6^{+0.012}_{0}$	$6^{+0.012}_{0}$	$6^{+0.012}_{0}$	$8^{+0.015}_{0}$	$10^{+0.015}_{0}$
øJ	$5^{+0.012}_{0}$	$6^{+0.012}_{0}$	$6^{+0.012}_{0}$	$8^{+0.015}_{0}$	$10^{+0.015}_{0}$	$12^{+0.018}_{0}$
N	5	6	6	8	10	11
P	12.5	14.5	17	17	20	25.5
R	R2.5	R3	R3	R4	R5	R5.5
S	10	12	13.5	13.5	17.5	22
T	3	3	4	4	5	8

● When mounting the clamp arm, use included pins and snap rings.

Clamp arm allowable eccentricity

An eccentric shape clamp arm, as shown in diagram on right can be used with link clamp model CLM, if it is not possible to set clamping point at tip section of clamp arm in alignment with center line of piston rod and clamp arm.
Amount of eccentricity, however, must be within allowable eccentricity shown below.
Using a clamp arm that exceeds allowable eccentricity results in significant eccentric load on link mechanism and piston rod, leading to malfunction.

Eccentric shape clamp arm

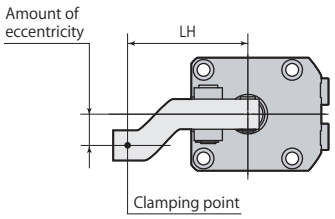

Ordinary clamp arm

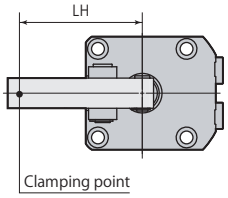

model CLM03 (indicates nonusable range)

Hydraulic pressure MPa	Allowable eccentricity mm, Clamp arm length LH mm							
	22.5	27.5	33.5	40	50	60	80	100
7				9	17	24	39	54
6.5			6	11	19	28	44	60
6			7	13	22	31	50	↑
5.5			9	16	26	36	56	↑
5			11	19	30	41	60	↑
4.5		7	14	23	35	48	↑	↑
4		9	18	27	42	56	↑	↑
3.5		12	22	33	50	60	↑	↑
3	6	16	28	41	60	↑	↑	↑
2.5	10	22	37	52	↑	↑	↑	↑
2	15	30	49	60	↑	↑	↑	↑
1.5	24	45	60	↑	↑	↑	↑	↑
1	41	60	↑	↑	↑	↑	↑	↑
0.5	60	60	60	60	60	60	60	60

model CLM04 (indicates nonusable range)

Hydraulic pressure MPa	Allowable eccentricity mm, Clamp arm length LH mm							
	25	30	36.5	40	50	60	80	100
7			6	8	15	21	33	46
6.5			8	10	18	25	39	53
6			10	13	21	29	45	60
5.5		6	12	16	25	34	53	↑
5		8	15	19	30	41	60	↑
4.5	6	11	19	23	36	48	↑	↑
4	7	14	23	29	43	58	↑	↑
3.5	9	18	29	35	53	60	↑	↑
3	13	23	37	44	60	↑	↑	↑
2.5	17	30	48	57	↑	↑	↑	↑
2	24	41	60	60	↑	↑	↑	↑
1.5	36	60	↑	↑	↑	↑	↑	↑
1	60	↑	↑	↑	↑	↑	↑	↑
0.5	60	60	60	60	60	60	60	60

model CLM05 (indicates nonusable range)

Hydraulic pressure MPa	Allowable eccentricity mm, Clamp arm length LH mm							
	30	35	42	50	60	80	100	120
7			6	6	6	10	16	21
6.5			6	6	8	16	24	30
6			6	10	14	23	32	42
5.5		6	6	14	20	32	44	56
5		6	12	19	26	42	58	60
4.5	6	8	16	25	35	55	60	↑
4	6	11	20	30	44	60	↑	↑
3.5	6	14	25	38	53	↑	↑	↑
3	10	19	32	46	60	↑	↑	↑
2.5	15	26	41	58	↑	↑	↑	↑
2	22	36	56	60	↑	↑	↑	↑
1.5	33	52	60	↑	↑	↑	↑	↑
1	56	60	↑	↑	↑	↑	↑	↑
0.5	60	60	60	60	60	60	60	60

model CLM06 (indicates nonusable range)

Hydraulic pressure MPa	Allowable eccentricity mm, Clamp arm length LH mm							
	35	40	50	60	70	80	100	120
7			8	8	8	8	8	8
6.5			8	8	8	8	8	8
6			8	12	14	16	18	20
5.5		6	12	20	25	28	34	42
5	6	10	18	27	36	42	54	65
4.5	9	14	26	36	48	58	75	80
4	13	20	35	48	64	78	80	↑
3.5	19	28	46	66	80	80	↑	↑
3	26	40	65	80	↑	↑	↑	↑
2.5	34	52	80	↑	↑	↑	↑	↑
2	47	68	↑	↑	↑	↑	↑	↑
1.5	68	80	↑	↑	↑	↑	↑	↑
1	80	↑	↑	↑	↑	↑	↑	↑
0.5	80	80	80	80	80	80	80	80

model CLM10 (indicates nonusable range)

Hydraulic pressure MPa	Allowable eccentricity mm, Clamp arm length LH mm							
	40	50	56.5	80	100	120	140	160
7		9	9	9	14	16	18	19
6.5		9	9	15	22	30	38	45
6		9	9	22	32	44	55	65
5.5		9	15	32	45	60	75	88
5	9	15	20	42	60	80	95	95
4.5	9	22	30	56	80	95	↑	↑
4	11	30	40	75	95	↑	↑	↑
3.5	16	38	52	95	↑	↑	↑	↑
3	22	48	66	↑	↑	↑	↑	↑
2.5	30	64	85	↑	↑	↑	↑	↑
2	44	85	95	↑	↑	↑	↑	↑
1.5	66	95	↑	↑	↑	↑	↑	↑
1	95	↑	↑	↑	↑	↑	↑	↑
0.5	95	95	95	95	95	95	95	95

model CLM16 (indicates nonusable range)

Hydraulic pressure MPa	Allowable eccentricity mm, Clamp arm length LH mm								
	50	60	69.5	80	100	120	140	160	180
7		11	18	28	37	45	53	61	68
6.5		12	22	33	51	63	74	86	97
6		15	26	39	63	81	97	110	110
5.5	11	19	31	45	72	98	110	↑	↑
5	11	24	38	53	82	110	↑	↑	↑
4.5	13	29	45	62	96	↑	↑	↑	↑
4	17	36	54	74	110	↑	↑	↑	↑
3.5	23	45	66	89	↑	↑	↑	↑	↑
3	31	57	82	110	↑	↑	↑	↑	↑
2.5	43	74	104	↑	↑	↑	↑	↑	↑
2	60	100	110	↑	↑	↑	↑	↑	↑
1.5	88	110	↑	↑	↑	↑	↑	↑	↑
1	110	↑	↑	↑	↑	↑	↑	↑	↑
0.5	110	110	110	110	110	110	110	110	110

● Sensor model (model CLM-T, CLM-C, CLM-B) applicable hydraulic pressure should be 1.5 to 7MPa.

Table of contents

Features 144

Structure, Hydraulic and pneumatic circuit diagram 145

Specifications 146

Piping 147

Performance diagram, Performance table 148

Unclamp sensor model **CLN-B**

- PAL sensor function and structure 151
- Sensor signal detection 152
- **CLN-B** Dimensions 154
- Mounting details 156

Compact model **CLN-N**

- **CLN-N** Dimensions 158
- Mounting details 160

Clamp arm mounting details 161

Clamp arm allowable eccentricity 162

Caution in use 163

Flow control valve **VCF** 164

Air bleeding valve **VCE** 166

Sensing Link clamp

Single acting 7 MPa

model CLN

Unclamp sensor model
model CLN06-FB

Compact model
model CLN06-FN

Sensing Link clamp model CLN

The extremely small sensing clamp can detect the loading miss of a workpiece firmly.

Unclamp sensor model

- Unclamp PAL sensor moves along with the piston rod and can positively detect unclamping point, thereby enabling a high-speed production line by fully synchronizing operation with workpiece lifters.
- Built-in sensors enable a compact and simple jig.
- Unclamp detection failure due to the metal chips deposit on an independent external detector can be reduced. (Figure 1)

Figure 1

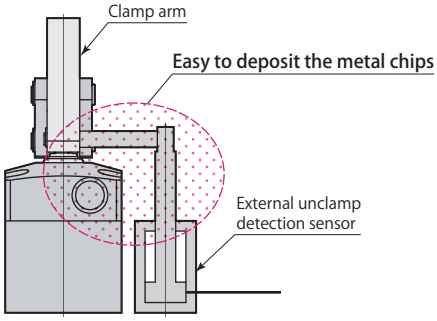

Unclamp sensor model B

model **CLN□-□B** PAT.

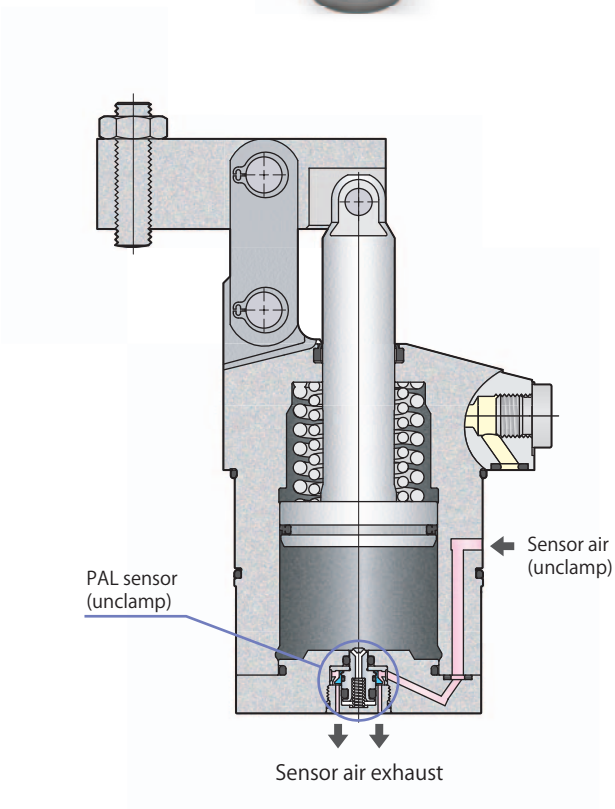

Compact model N

model **CLN□-□N**

No sensors available on compact model

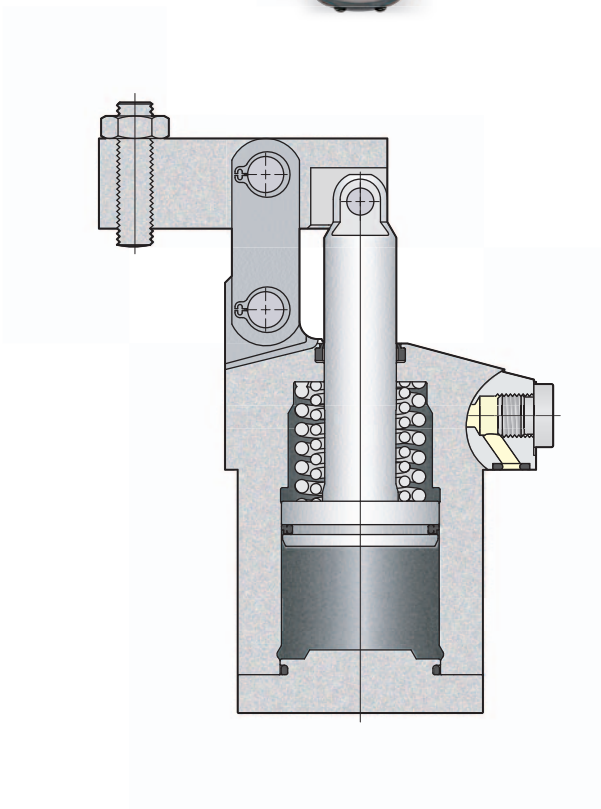

Hydraulic and pneumatic circuit diagram

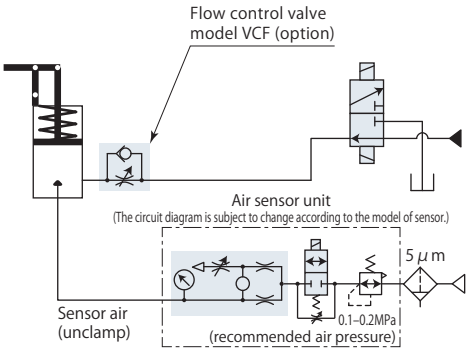

Hydraulic circuit diagram

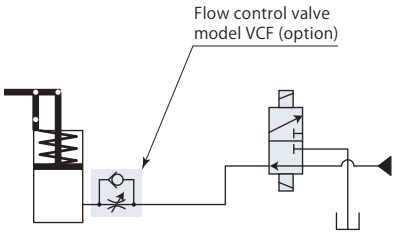

Specifications	page → 146
Piping	page → 147
PAL sensor	page → 151
Dimensions	page → 154
Mounting details	page → 156

Specifications	page → 146
Piping	page → 147
Dimensions	page → 158
Mounting details	page → 160

Specifications

CLN — Size: 04, 05, 06, 10, 16

Clamp arm mounting direction

- L : Left side
- F : Front side
- R : Right side

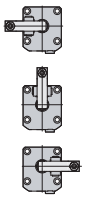

- B : Unclamp sensor model
- N : Compact model

Model			CLN04	CLN05	CLN06	CLN10	CLN16
Cylinder force (hydraulic pressure 7MPa)*1		kN	3.5	4.6	6.1	10.3	15.1
Cylinder inner diameter		mm	26	30	35	45	55
Rod diameter		mm	12	14	16	20	22
Effective area (clamp)		cm^2	5.3	7.1	9.6	15.9	23.8
Full stroke		mm	20.5	23.5	26	29.5	35
Clamp stroke*2		mm	17.5	20.5	23	26.5	32
Safety stroke		mm	3	3	3	3	3
Max. oil flow rate		L/min	1.1	1.7	2.6	5.1	9.1
Cylinder capacity		cm^3	10.9	16.6	25.0	46.9	83.2
Return spring force	Clamp	kN	0.25	0.40	0.63	0.81	1.52
	Unclamp	kN	0.13	0.19	0.33	0.44	0.84
Recommended piping inner diameter*3		mm	ø6	ø6	ø6	ø8	ø8
Max. allowable mass of clamp arm*4		kg	0.2	0.3	0.5	1.0	1.5
Mass		kg	0.7	1.1	1.4	2.3	3.8
Recommended tightening torque of mounting screws*5		N·m	7	7	12	12	29

- Pressure range：1.5–7 MPa
- Proof pressure：10.5 MPa
- Operating temperature：0–70 ℃
- Fluid used：General mineral based hydraulic oil (ISO-VG32 equivalent)
- Seals are resistant to chlorine-based cutting fluid. (not thermal resistant specification)

*1：This is value for clamping position. *2：Indicates a distance from unclamping position to clamping point.
*3：Care must be taken when numerous clamps are used or when hydraulic piping is long.
*4：This is clamp arm mass when shape of clamp arm being described in Dimensions is retained but length only has been extended.
*5：ISO R898 class 12.9

When clamping the workpiece, the clamp arm should be situated like the sketch as shown below. (Clamping point)
Please avoid any non-axial force such as the bending moment toward the piston rod. (Allowable angle ±3°)

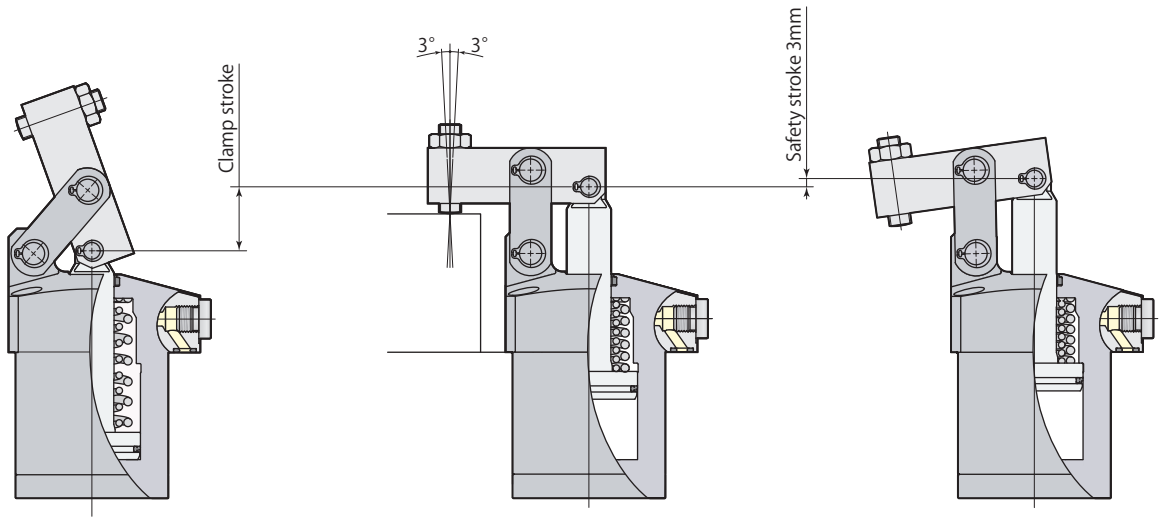

Unclamp | Clamping point | Over clamp stroke (Full stroke)

Manifold piping and G port piping are available.

Manifold piping

When choosing manifold piping, a flow control valve (model VCF) and an air bleeding valve (model VCE) are mountable on the G ports of the clamp.

G port piping

Remove plug when choosing G port piping. (O-ring must be used.) Refer to **page →220** for details on G port piping flareless fitting. The flow control valve and the air bleeding valve should be installed in the middle of oil path.

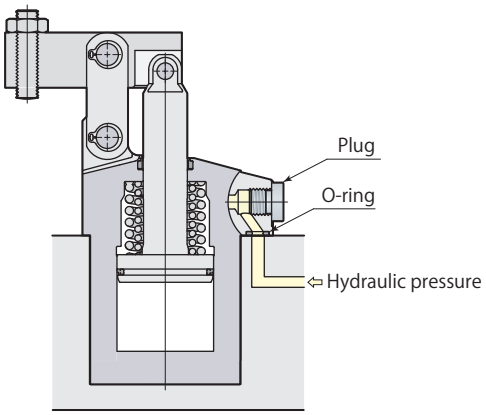

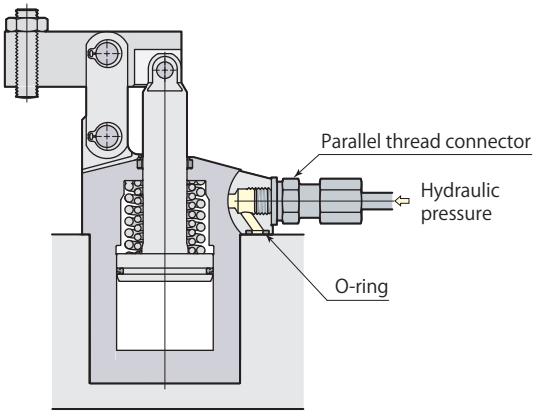

Flow control valve model VCF

Page →164

Air bleeding valve model VCE

Page →166

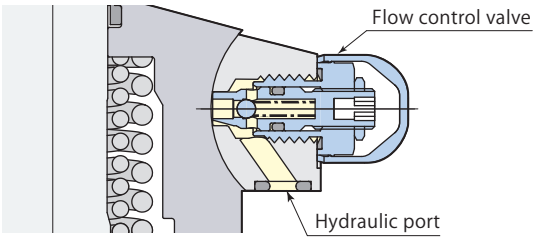

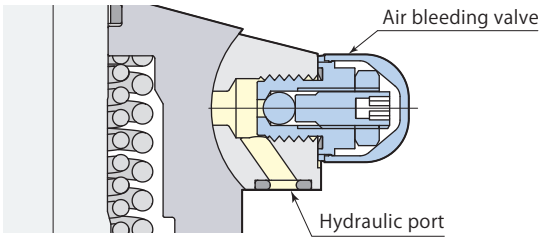

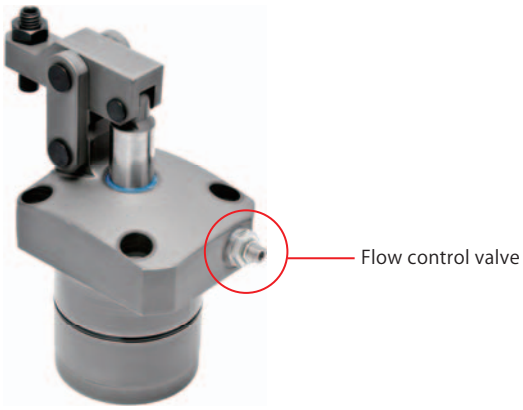

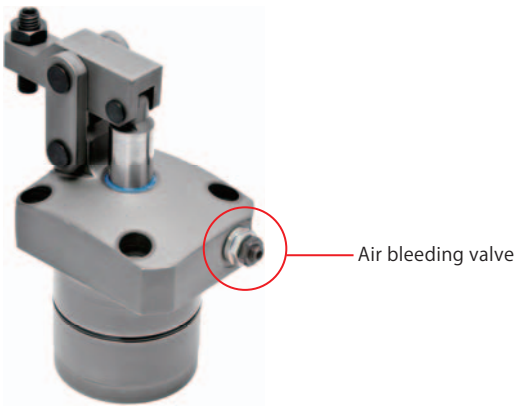

● In case of mounting flow control valve model VCF on the G port of the clamp, air bleeding valve should be installed in the piping to the clamp. (VCE Mounting details. Refer to **page →166**)

Performance diagram

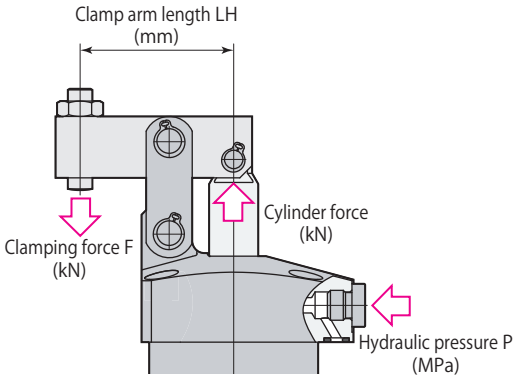

Clamping force varies depending on the clamp arm length (LH) and hydraulic pressure (P).

Clamping force calculation formula
F＝ (Coefficient 1 × P - Coefficient 2) / (LH - Coefficient 3)
F：Clamping force　P：Hydraulic pressure　LH：Clamp arm length

CLN06 with clamp arm length (LH) = 50 mm at hydraulic pressure of 7 MPa, Clamping force F is calculated by
(18.18×7-11.91) / (50-21.0) ＝4.0 kN

Do not use the clamp in the nonusable range. It may cause damage of link mechanism.

model CLN04

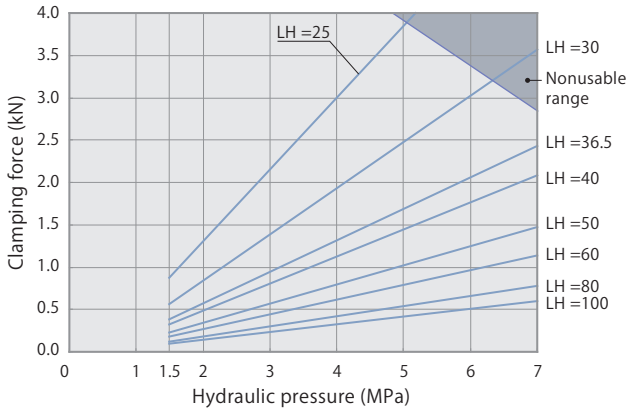

model CLN05

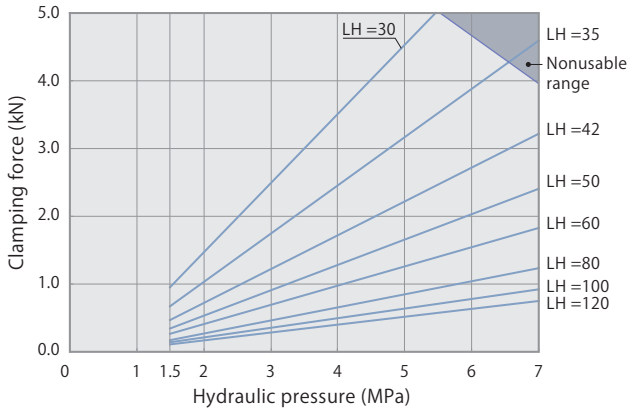

model CLN06

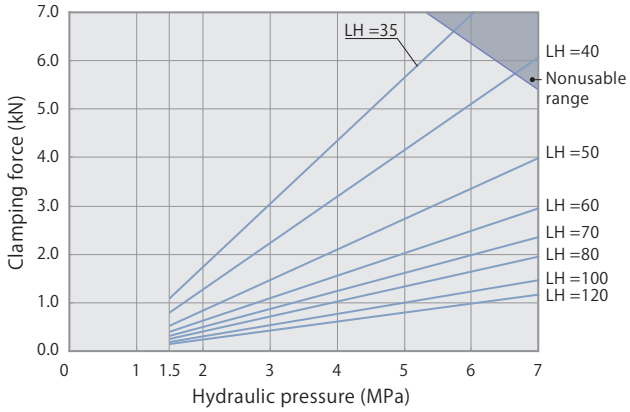

model CLN10

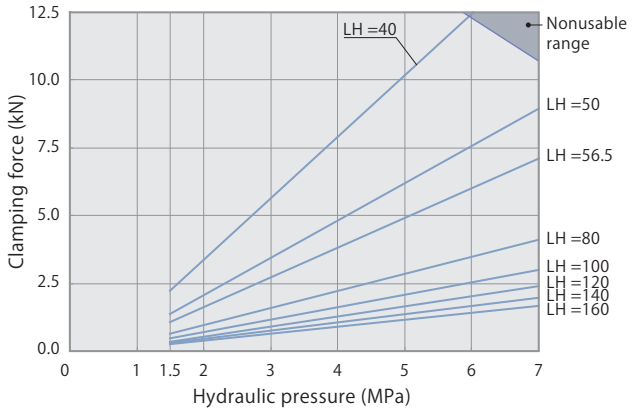

model CLN16

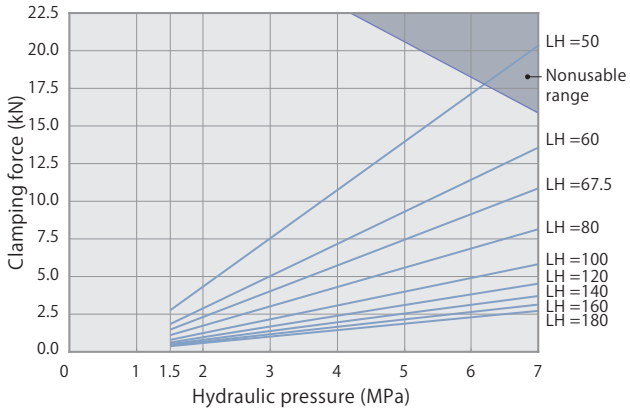

Performance table

model CLN04 Clamping force F=(7.65×P-3.63)/(LH-16.0)

Hydraulic pressure MPa	Cylinder force kN	Clamping force kN / Clamp arm length LH mm								Min. arm length Min. LH mm
		25	30	36.5	40	50	60	80	100	
7	3.5			2.4	2.1	1.5	1.1	0.8	0.6	34
6.5	3.2			2.2	1.9	1.4	1.0	0.7	0.5	31
6	2.9		3.0	2.1	1.8	1.2	1.0	0.7	0.5	29
5.5	2.7		2.7	1.9	1.6	1.1	0.9	0.6	0.5	27
5	2.4	3.8	2.5	1.7	1.4	1.0	0.8	0.5	0.4	25
4.5	2.1	3.4	2.2	1.5	1.3	0.9	0.7	0.5	0.4	24
4	1.9	3.0	1.9	1.3	1.1	0.8	0.6	0.4	0.3	↑
3.5	1.6	2.6	1.7	1.1	1.0	0.7	0.5	0.4	0.3	↑
3	1.3	2.1	1.4	0.9	0.8	0.6	0.4	0.3	0.2	↑
2.5	1.1	1.7	1.1	0.8	0.6	0.5	0.4	0.2	0.2	↑
2	0.8	1.3	0.8	0.6	0.5	0.3	0.3	0.2	0.1	↑
1.5	0.5	0.9	0.6	0.4	0.3	0.2	0.2	0.1	0.1	24
Max. pressure MPa		5.0	6.3	7.0	7.0	7.0	7.0	7.0	7.0	

indicates nonusable range

model CLN05 Clamping force F=(11.77×P-6.66)/(LH-18.5)

Hydraulic pressure MPa	Cylinder force kN	Clamping force kN / Clamp arm length LH mm								Min. arm length Min. LH mm
		30	35	42	50	60	80	100	120	
7	4.5			3.2	2.4	1.8	1.2	0.9	0.7	38
6.5	4.2		4.2	3.0	2.2	1.7	1.1	0.9	0.7	35
6	3.8		3.9	2.7	2.0	1.5	1.0	0.8	0.6	33
5.5	3.5		3.5	2.5	1.8	1.4	0.9	0.7	0.6	31
5	3.1	4.5	3.2	2.2	1.7	1.3	0.8	0.6	0.5	29
4.5	2.8	4.0	2.8	2.0	1.5	1.1	0.8	0.6	0.5	27
4	2.4	3.5	2.4	1.7	1.3	1.0	0.7	0.5	0.4	↑
3.5	2.1	3.0	2.1	1.5	1.1	0.8	0.6	0.4	0.3	↑
3	1.7	2.5	1.7	1.2	0.9	0.7	0.5	0.4	0.3	↑
2.5	1.4	2.0	1.4	1.0	0.7	0.5	0.4	0.3	0.2	↑
2	1.0	1.5	1.0	0.7	0.5	0.4	0.3	0.2	0.2	↑
1.5	0.7	1.0	0.7	0.5	0.3	0.3	0.2	0.1	0.1	27
Max. pressure MPa		5.4	6.5	7.0	7.0	7.0	7.0	7.0	7.0	

indicates nonusable range

model CLN06 Clamping force F=(18.18×P-11.91)/(LH-21.0)

Hydraulic pressure MPa	Cylinder force kN	Clamping force kN / Clamp arm length LH mm								Min. arm length Min. LH mm
		35	40	50	60	70	80	100	120	
7	6.1			4.0	3.0	2.4	2.0	1.5	1.2	43
6.5	5.6		5.6	3.7	2.7	2.2	1.8	1.3	1.1	40
6	5.1		5.1	3.4	2.5	2.0	1.6	1.2	1.0	37
5.5	4.7	6.3	4.6	3.0	2.3	1.8	1.5	1.1	0.9	34
5	4.2	5.6	4.2	2.7	2.0	1.6	1.3	1.0	0.8	32
4.5	3.7	5.0	3.7	2.4	1.8	1.4	1.2	0.9	0.7	31
4	3.2	4.3	3.2	2.1	1.6	1.2	1.0	0.8	0.6	↑
3.5	2.7	3.7	2.7	1.8	1.3	1.1	0.9	0.7	0.5	↑
3	2.3	3.0	2.2	1.5	1.1	0.9	0.7	0.5	0.4	↑
2.5	1.8	2.4	1.8	1.2	0.9	0.7	0.6	0.4	0.3	↑
2	1.3	1.7	1.3	0.8	0.6	0.5	0.4	0.3	0.2	↑
1.5	0.8	1.1	0.8	0.5	0.4	0.3	0.3	0.2	0.2	31
Max. pressure MPa		5.7	6.6	7.0	7.0	7.0	7.0	7.0	7.0	

indicates nonusable range

model CLN10 Clamping force F=(35.07×P-17.68)/(LH-24.5)

Hydraulic pressure MPa	Cylinder force kN	Clamping force kN / Clamp arm length LH mm								Min. arm length Min. LH mm
		40	50	56.5	80	100	120	140	160	
7	10.3		8.9	7.1	4.1	3.0	2.4	2.0	1.7	46
6.5	9.5		8.2	6.6	3.8	2.8	2.2	1.8	1.6	43
6	8.7		7.6	6.0	3.5	2.6	2.0	1.7	1.4	41
5.5	7.9	11.3	6.9	5.5	3.2	2.3	1.8	1.5	1.3	38
5	7.1	10.2	6.2	4.9	2.8	2.1	1.6	1.4	1.2	36
4.5	6.3	9.0	5.5	4.4	2.5	1.9	1.5	1.2	1.0	↑
4	5.6	7.9	4.8	3.8	2.2	1.6	1.3	1.1	0.9	↑
3.5	4.8	6.8	4.1	3.3	1.9	1.4	1.1	0.9	0.8	↑
3	4.0	5.6	3.4	2.7	1.6	1.2	0.9	0.8	0.6	↑
2.5	3.2	4.5	2.7	2.2	1.3	0.9	0.7	0.6	0.5	↑
2	2.4	3.4	2.1	1.6	0.9	0.7	0.5	0.5	0.4	↑
1.5	1.6	2.2	1.4	1.1	0.6	0.5	0.4	0.3	0.3	36
Max. pressure MPa		5.9	7.0	7.0	7.0	7.0	7.0	7.0	7.0	

indicates nonusable range

model CLN16 Clamping force F=(64.15×P-41.04)/(LH-30.0)

Hydraulic pressure MPa	Cylinder force kN	Clamping force kN / Clamp arm length LH mm								Min. arm length Min. LH mm
		50	60	67.5	80	100	120	140	160	180	
7	15.1		13.6	10.9	8.2	5.8	4.5	3.7	3.1	2.7	54
6.5	13.9		12.5	10.0	7.5	5.4	4.2	3.4	2.9	2.5	51
6	12.7	17.2	11.5	9.2	6.9	4.9	3.8	3.1	2.6	2.3	48
5.5	11.5	15.6	10.4	8.3	6.2	4.5	3.5	2.8	2.4	2.1	45
5	10.4	14.0	9.3	7.5	5.6	4.0	3.1	2.5	2.2	1.9	43
4.5	9.2	12.4	8.3	6.6	5.0	3.5	2.8	2.3	1.9	1.7	↑
4	8.0	10.8	7.2	5.7	4.3	3.1	2.4	2.0	1.7	1.4	↑
3.5	6.8	9.2	6.1	4.9	3.7	2.6	2.0	1.7	1.4	1.2	↑
3	5.6	7.6	5.0	4.0	3.0	2.2	1.7	1.4	1.2	1.0	↑
2.5	4.4	6.0	4.0	3.2	2.4	1.7	1.3	1.1	0.9	0.8	↑
2	3.2	4.4	2.9	2.3	1.7	1.2	1.0	0.8	0.7	0.6	↑
1.5	2.0	2.8	1.8	1.5	1.1	0.8	0.6	0.5	0.4	0.4	43
Max. pressure MPa		6.4	7.0	7.0	7.0	7.0	7.0	7.0	7.0	7.0	

indicates nonusable range

Unclamp PAL sensor function and structure

Unclamp detection

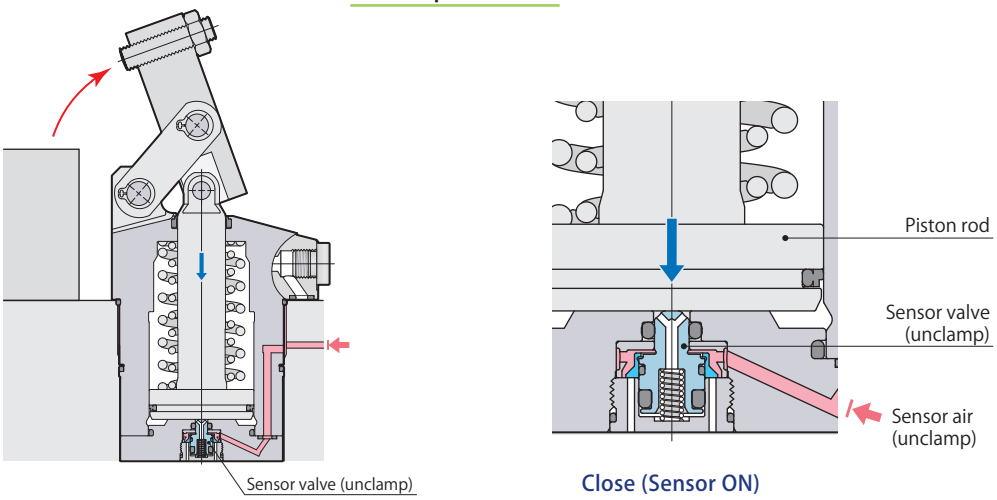

● The sensor valve (unclamp) is pushed down by the piston rod and shuts off the sensor air flow when the piston rod reaches the unclamp end, and detects the unclamped condition.

In the middle of clamp stroke

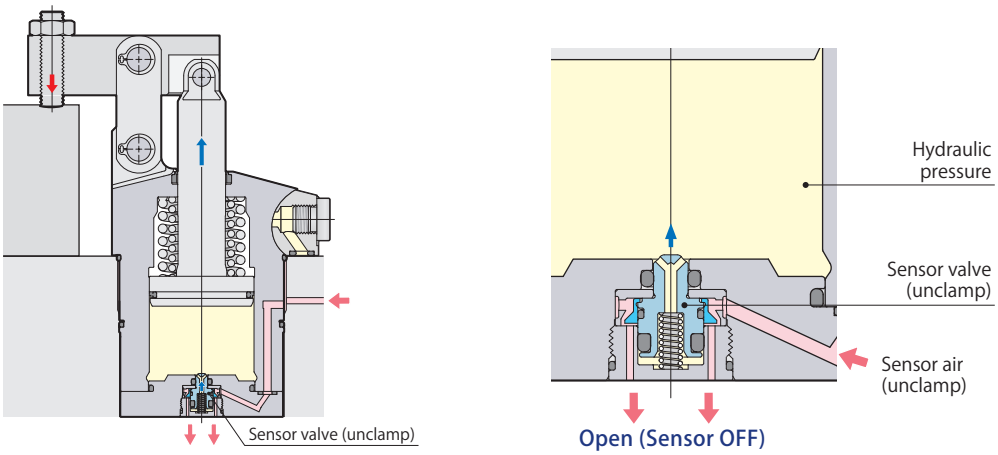

● The sensor valve (unclamp) is pushed up by the hydraulic force to open for air exhaust while piston rod strokes.

Unclamp detection signal

Unclamp detection

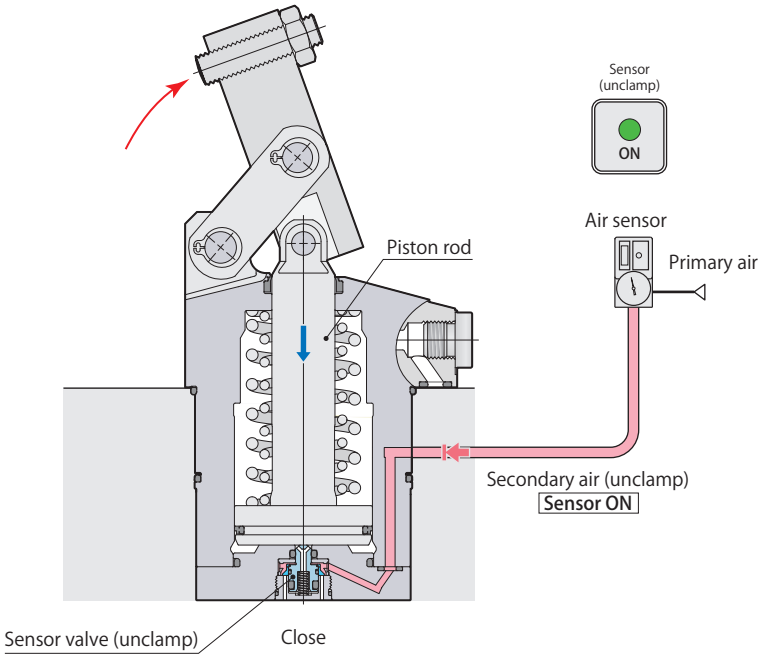

Sensor signal (unclamp)	ON	Unclamp

In the middle of clamp stroke

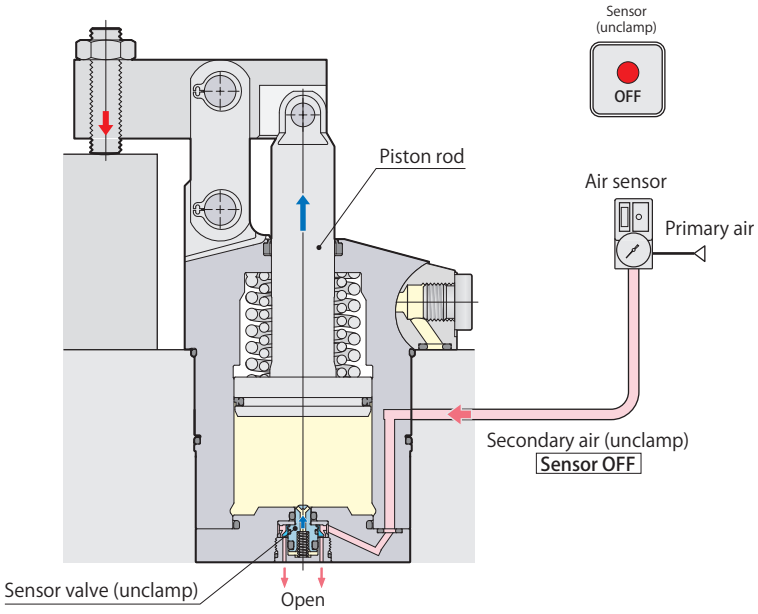

Sensor signal (unclamp)	OFF	Clamp, in the middle of clamp stroke

Air sensor triggering point

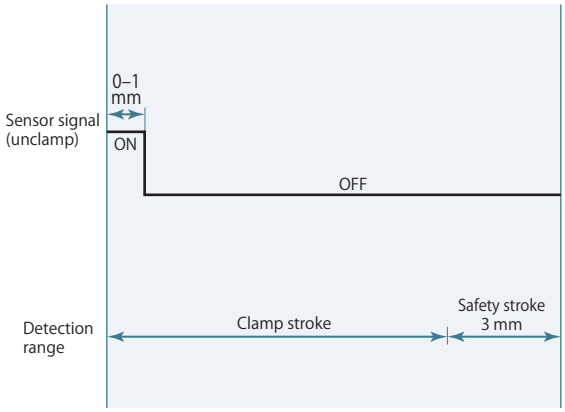

- Refer to the sensor supplier's instruction manual for the details of setting.
- Sensing performance such as detectable time and pressure differs depending on the supplier and model number of the sensor. Select the right model referring to sensor's application and characteristics.

Air sensor unit recommended condition of use

Supplier and model	ISA3-F/G series manufactured by SMC
	GPS2-05, GPS3-E series manufactured by CKD
Air supply pressure	0.1–0.2 MPa
Inner diameter of piping	ø4 mm (ISA3-F：ø2.5 mm)
Overall piping length	5 m or less

- Supply the dry and filtered air. Particulate size 5 μm or less is recommended.
- Use a solenoid valve with needle for air sensor unit and control it supplying air all the time in order to eliminate intrusion of chips or coolant.
- There is a case that air sensing cannot be successfully made as designed when it is used out of the above usage. Contact Technical service center for more details.

Relation between sensor air pressure, PAL sensor and piston stroke

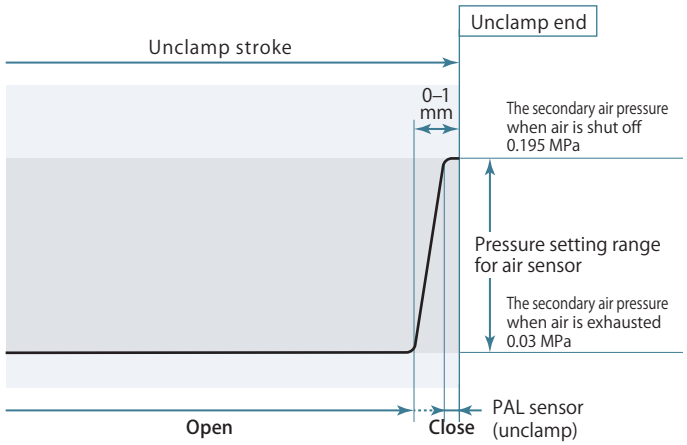

The diagram shown above indicates the relation between the PAL sensor, piston stroke, and secondary air pressure. (The pressure shown in the diagram is a reference based on the 0.2 MPa of primary air pressure for one piece of clamp.)

Since the new PAL sensor works with less air-leakage compared to previous sensor valve,

- Enhances the pressure setting range of the sensor which enables the sensor to set easily. (Ex. Pressure setting range 0.03–0.195 MPa in the diagram)
- Allows the use for a number of clamps by one air sensor because of better pressure holding when air is shut off. (Maximum number of clamps to be detected by one sensor is 10.)
- Allows to choose less air-consumed, i.e. small orifice diameter type, air sensor.
- Can create large differential-pressure when opening and closing the PAL sensor so that sensor primary pressure can be set as low as possible and reduce the consumption of air.

New PAL sensor

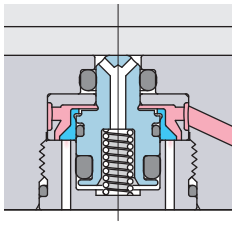

Poppet structure ensures superior sealing performance and can create large differential-pressure when the valve is opening and closing, and air leakage can be minimized.

Previous sensor valve

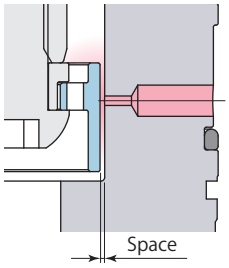

Air leaks easily due to a large space.

Dimensions

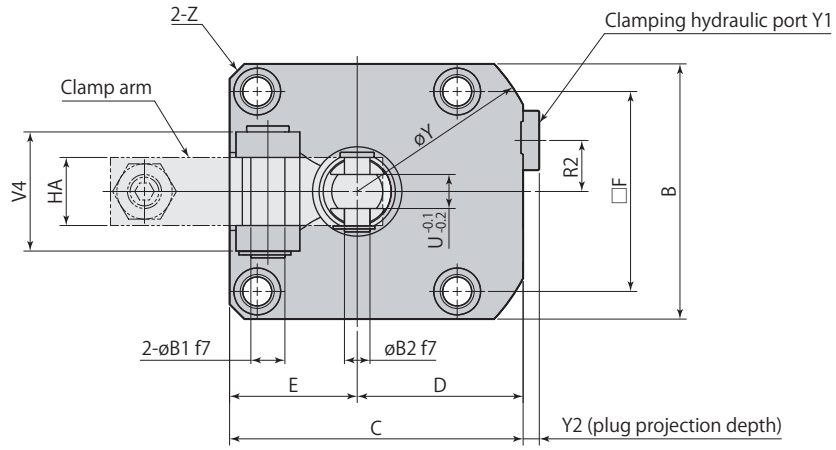

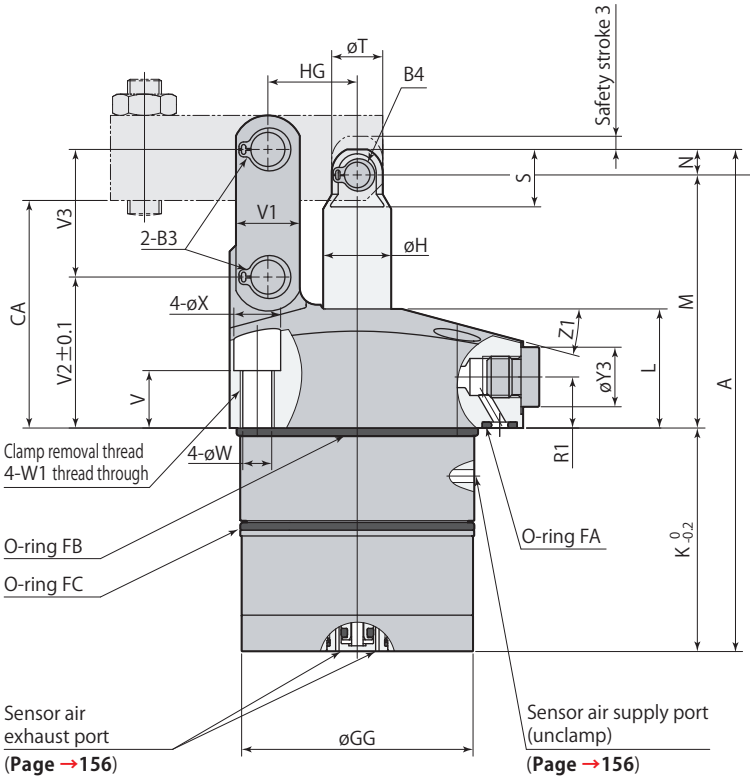

Clamp

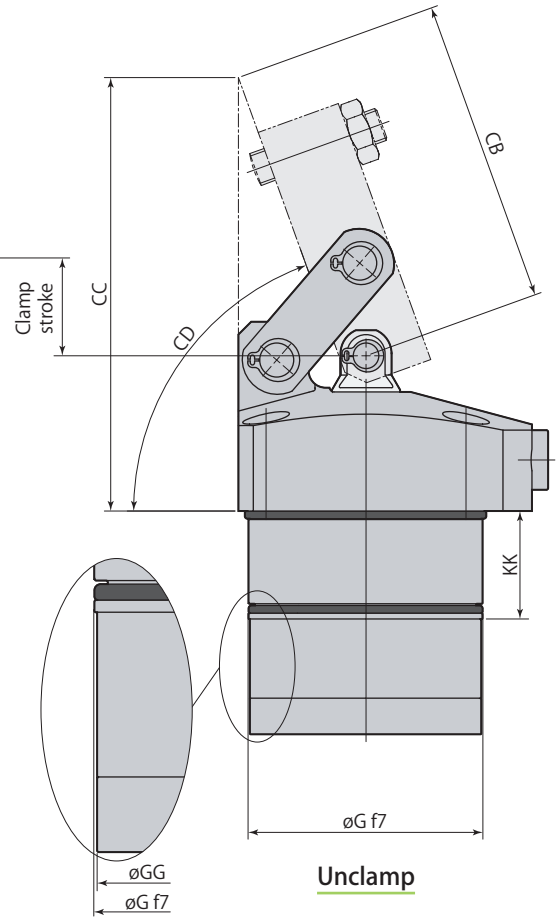

Unclamp

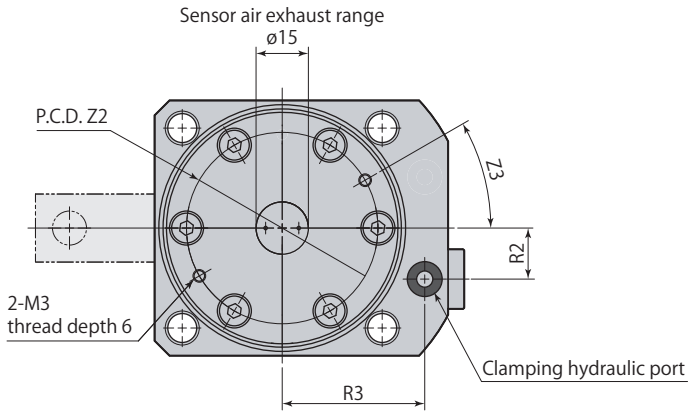

- This diagram represents external contour of CLN□-F. CLN□-L and CLN□-R differ only in terms of mounting direction of clamp arm and otherwise all dimensions are identical to those of CLN□-F.

L:Left side F:Front side R:Right side

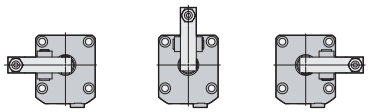

- Clamp arm and mounting screws are not included.

mm

Model	CLN04-□B	CLN05-□B	CLN06-□B	CLN10-□B	CLN16-□B
A	92.5	104.5	118	132.5	158
B	45	51	60	70	85
C	54	61	69	81	94.5
D	31.5	35.5	39	46	52
E	22.5	25.5	30	35	42.5
F	34	40	47	55	63
øG	$40^{-0.025}_{-0.050}$	$48^{-0.025}_{-0.050}$	$55^{-0.030}_{-0.060}$	$65^{-0.030}_{-0.060}$	$75^{-0.030}_{-0.060}$
øGG	39.4	47.4	54.4	64.4	74.4
øH	12	14	16	20	22
K	37	41.5	52.5	57.5	66
KK	25	25	25	25	25
L	25	28	28	30	37
M	50	57	59.5	67	82
N	5.5	6	6	8	10
R1	11	12	12	13	14
R2	9	11	12	15	16
R3	26	30	33.5	39.5	45
S	12.5	13.5	13.5	17.5	22
øT	11	12	12	15	19
U (width across flats)	6	6	8	10	11
V	15.5	16.5	13.5	15.5	17.5
V1	11	13	15	19	25
V2	30.5	34.5	35.5	39	48
V3	22	26	30	35.5	43.5
V4	21	21	28	37	40
øW	5.5	5.5	6.8	6.8	9
W1	M6×1	M6×1	M8×1.25	M8×1.25	M10×1.5
øX	9.5	9.5	11	11	14
øY	72	81	88	106	116
Y1	G1/8	G1/8	G1/8	G1/4	G1/4
Y2	3.8	3.8	3.8	4.8	4.8
øY3	14	14	14	19	19
Z	C3	C3	C3.5	C4.5	C10
Z1	15°	15°	15°	12°	15°
Z2	32	38	45	53.5	63.5
Z3	30°	30°	30°	30°	45°
øB1	$6^{-0.010}_{-0.022}$	$6^{-0.010}_{-0.022}$	$8^{-0.013}_{-0.028}$	$10^{-0.013}_{-0.028}$	$12^{-0.016}_{-0.034}$
øB2	$6^{-0.010}_{-0.022}$	$6^{-0.010}_{-0.022}$	$6^{-0.010}_{-0.022}$	$8^{-0.013}_{-0.028}$	$10^{-0.013}_{-0.028}$
B3 (snap ring)*1	STW-6	STW-6	STW-8	STW-10	STW-12
B4 (snap ring)*1	STW-6	STW-6	STW-6	STW-8	STW-10
CA	44.5	51	53.5	59	72
CB	50.2	61.2	71.7	78.7	90.8
CC	77.7	92.4	101.9	111.4	130.8
CD	About 70°	About 71°	About 70°	About 70°	About 69°
HA	12	12	16	19	22
HG	16	18.5	21	24.5	30
O-ring FA (fluorocarbon hardness Hs90)	P5	P5	P5	P7	P7
O-ring FB (fluorocarbon hardness Hs70)	AS568-029	AS568-031	AS568-034	AS568-037	AS568-040
O-ring FC (fluorocarbon hardness Hs70)	AS568-028	AS568-031	AS568-033	AS568-036	AS568-039
Flow control valve (meter-in)*2	VCF01S	VCF01	VCF01	VCF02	VCF02
Air bleeding valve*2	VCE01	VCE01	VCE01	VCE02	VCE02

*1: Snap ring is made by Ochiai Corporation.

*2: Select the right model of VCF and VCE according to the size of the clamp.

Refer to each page for the details of options. ● Flow control valve **page →164** ● Air bleeding valve **page →166**

Mounting details

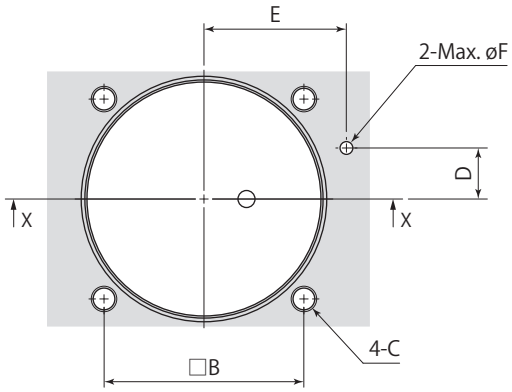

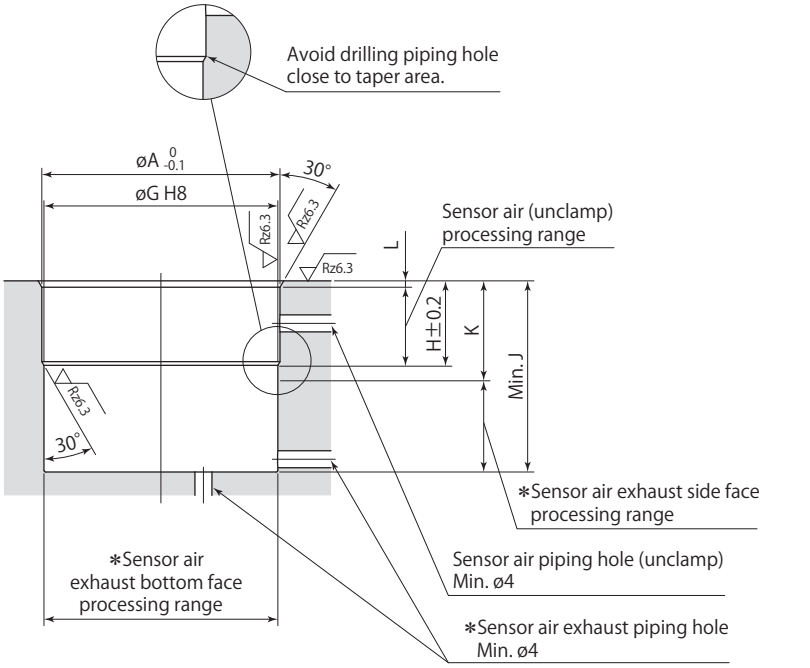

In blind hole X-X

*: Sensor air exhaust piping hole must be made on either side or bottom face.

Rz: ISO4287(1997)

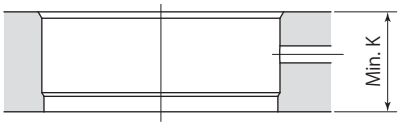

In through hole X-X

- Apply an appropriate amount of grease to the chamfer and the bore when mounting. Excessive grease may be a blockage in the air passage, causing malfunction of the sensor.
- The 30° taper machining must be provided to avoid the damage of the O-ring. Ensure that there are no interference on taper area when drilling the hole for sensor air.

Mounting details

mm

Model	CLN04-□B	CLN05-□B	CLN06-□B	CLN10-□B	CLN16-□B
øA	40.8	49	56	66	76
B	34	40	47	55	63
C	M5	M5	M6	M6	M8
D	9	11	12	15	16
E	26	30	33.5	39.5	45
øF	3	3	3	5	5
øG	$40^{+0.039}_{0}$	$48^{+0.039}_{0}$	$55^{+0.046}_{0}$	$65^{+0.046}_{0}$	$75^{+0.046}_{0}$
H	20.5	20.5	20.5	20.5	20.5
J	37.5	42	53	58	66.5
K	25	25	25	25	25
L	1.2	1.5	1.5	1.5	1.5

Caution for piping

Refer to the diagram shown below for the sensor air exhaust port.

Mounting in blind hole
(Sensor air exhaust：side face)

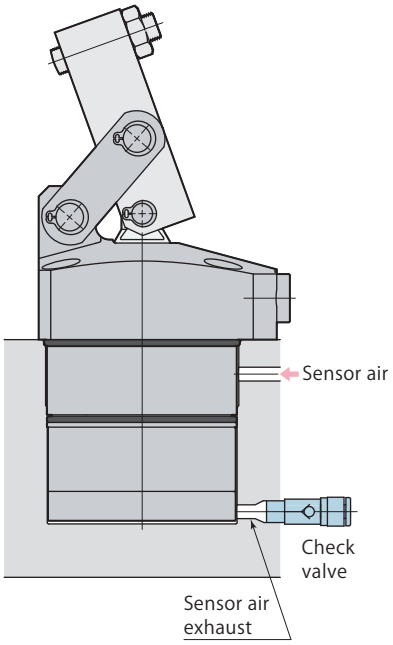

Mounting in blind hole
(Sensor air exhaust：bottom face)

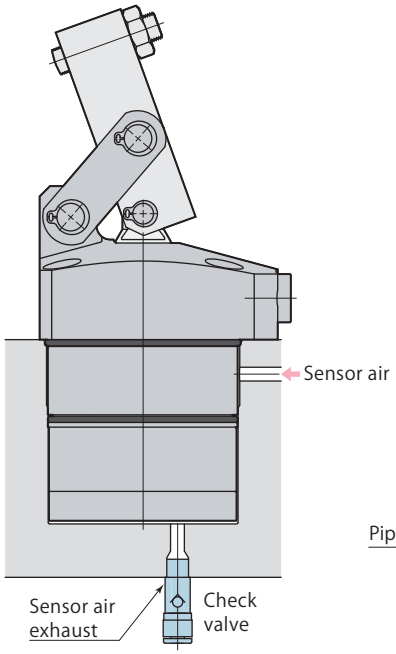

Mounting in through hole

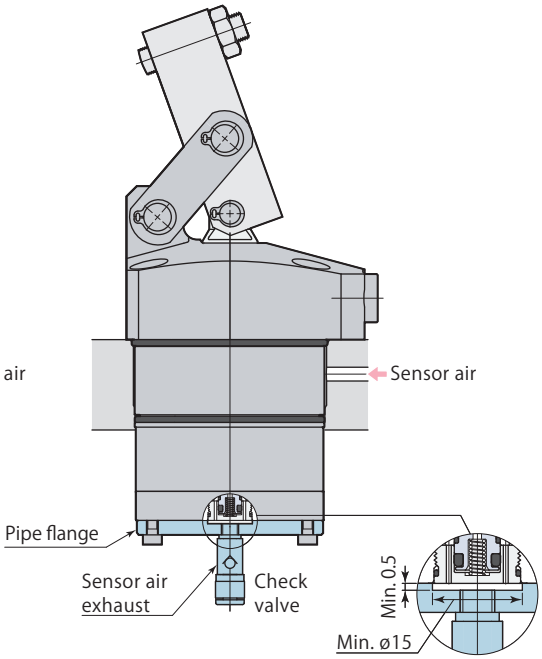

- Use a check valve with cracking pressure of 0.005 MPa or less if there is a risk of metal chips or coolant intrusion. Recommended check valve : AKH or AKB series manufactured by SMC.
- Furnish the piping by means of the pipe flange when mounting in a through hole. The flange is mountable with M3 threads at the bottom of the clamp. Be sure to provide an opening not to cover the exhaust port. See the sketch shown above.

Dimensions

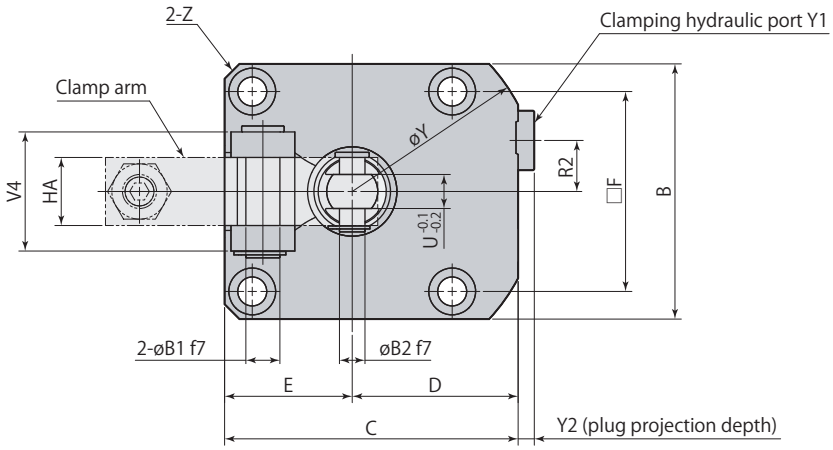

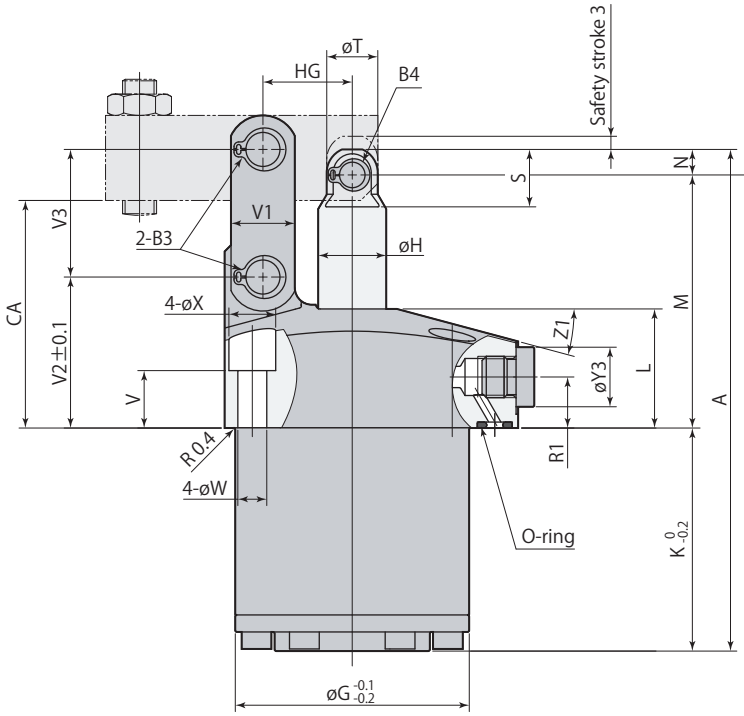

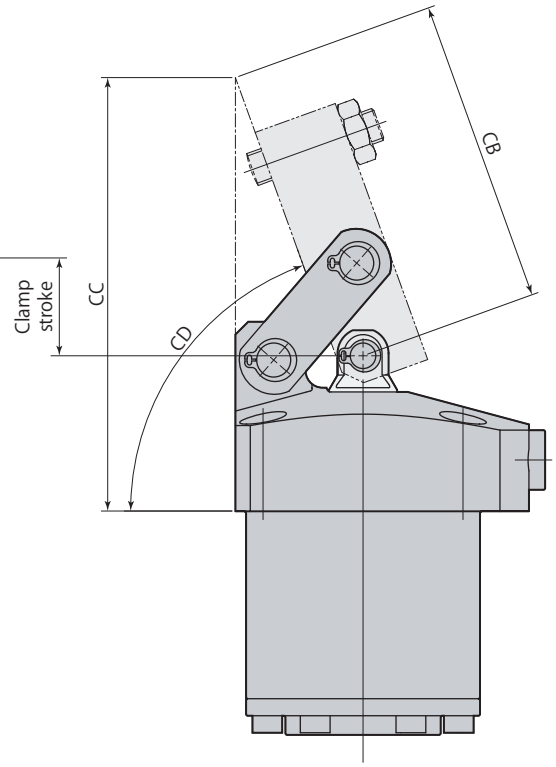

Clamp

Unclamp

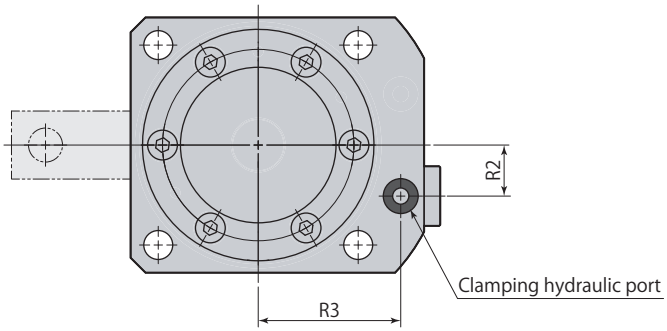

- This diagram represents external contour of CLN□-F. CLN□-L and CLN□-R differ only in terms of mounting direction of clamp arm and otherwise all dimensions are identical to those of CLN□-F.

L:Left side F:Front side R:Right side

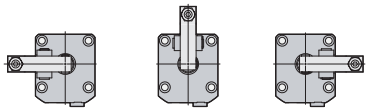

- Clamp arm and mounting screws are not included.

mm

Model	CLN04-□N	CLN05-□N	CLN06-□N	CLN10-□N	CLN16-□N
A	92.5	104.5	118	132.5	158
B	45	51	60	70	85
C	54	61	69	81	94.5
D	31.5	35.5	39	46	52
E	22.5	25.5	30	35	42.5
F	34	40	47	55	63
øG	40	48	55	65	75
øH	12	14	16	20	22
K	37	41.5	52.5	57.5	66
L	25	28	28	30	37
M	50	57	59.5	67	82
N	5.5	6	6	8	10
R1	11	12	12	13	14
R2	9	11	12	15	16
R3	26	30	33.5	39.5	45
S	12.5	13.5	13.5	17.5	22
øT	11	12	12	15	19
U (width across flats)	6	6	8	10	11
V	15.5	16.5	13.5	15.5	17.5
V1	11	13	15	19	25
V2	30.5	34.5	35.5	39	48
V3	22	26	30	35.5	43.5
V4	21	21	28	37	40
øW	5.5	5.5	6.8	6.8	9
øX	9.5	9.5	11	11	14
øY	72	81	88	106	116
Y1	G1/8	G1/8	G1/8	G1/4	G1/4
Y2	3.8	3.8	3.8	4.8	4.8
øY3	14	14	14	19	19
Z	C3	C3	C3.5	C4.5	C10
Z1	15°	15°	15°	12°	15°
øB1	$6^{-0.010}_{-0.022}$	$6^{-0.010}_{-0.022}$	$8^{-0.013}_{-0.028}$	$10^{-0.013}_{-0.028}$	$12^{-0.016}_{-0.034}$
øB2	$6^{-0.010}_{-0.022}$	$6^{-0.010}_{-0.022}$	$6^{-0.010}_{-0.022}$	$8^{-0.013}_{-0.028}$	$10^{-0.013}_{-0.028}$
B3 (snap ring)*1	STW-6	STW-6	STW-8	STW-10	STW-12
B4 (snap ring)*1	STW-6	STW-6	STW-6	STW-8	STW-10
CA	44.5	51	53.5	59	72
CB	50.2	61.2	71.7	78.7	90.8
CC	77.7	92.4	101.9	111.4	130.8
CD	About 70°	About 71°	About 70°	About 70°	About 69°
HA	12	12	16	19	22
HG	16	18.5	21	24.5	30
O-ring (fluorocarbon hardness Hs90)	P5	P5	P5	P7	P7
Flow control valve (meter-in)*2	VCF01S	VCF01	VCF01	VCF02	VCF02
Air bleeding valve*2	VCE01	VCE01	VCE01	VCE02	VCE02

*1: Snap ring is made by Ochiai Corporation.

*2: Select the right model of VCF and VCE according to the size of the clamp.

Refer to each page for the details of options. ● Flow control valve **page →164** ● Air bleeding valve **page →166**

Mounting details

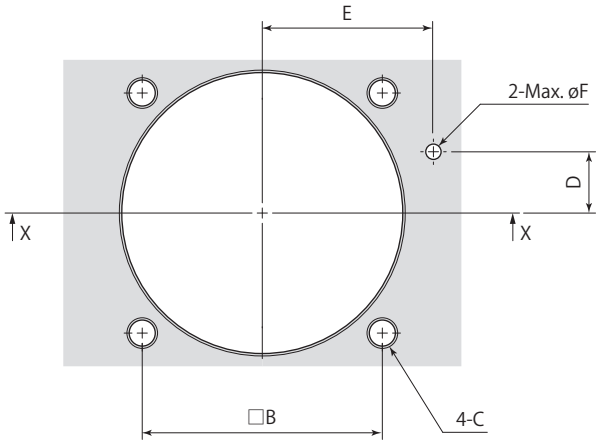

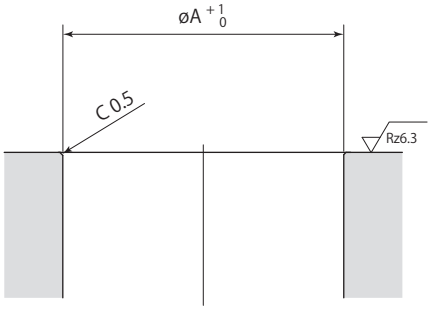

X-X

Rz: ISO4287(1997)

mm

Model	CLN04-□N	CLN05-□N	CLN06-□N	CLN10-□N	CLN16-□N
øA	40	48	55	65	75
B	34	40	47	55	63
C	M5	M5	M6	M6	M8
D	9	11	12	15	16
E	26	30	33.5	39.5	45
øF	3	3	3	5	5

Clamp arm mounting details

Clamp arm is not included. Manufacture a clamp arm with the dimensions shown in the table below.

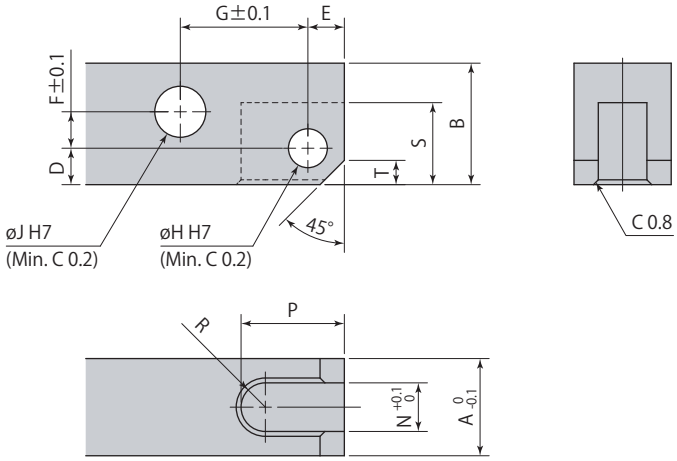

Recommended material：S45C (HB167–229)

mm

Link clamp	CLN04	CLN05	CLN06	CLN10	CLN16
A	12	12	16	19	22
B	14	16	20	25	32
D	5.5	6	6	8	10
E	5.5	6	6	7	10
F	2.5	3.5	6	7.5	9.5
G	16	18.5	21	24.5	30
øH	$6^{+0.012}_{0}$	$6^{+0.012}_{0}$	$6^{+0.012}_{0}$	$8^{+0.015}_{0}$	$10^{+0.015}_{0}$
øJ	$6^{+0.012}_{0}$	$6^{+0.012}_{0}$	$8^{+0.015}_{0}$	$10^{+0.015}_{0}$	$12^{+0.018}_{0}$
N	6	6	8	10	11
P	14.5	17	17	20	25.5
R	R3	R3	R4	R5	R5.5
S	12	13.5	13.5	17.5	22
T	3	4	4	5	8

● When mounting the clamp arm, use included pins and snap rings.

Clamp arm allowable eccentricity

An eccentric shape clamp arm, as shown in diagram on right can be used with link clamp model CLN, if it is not possible to set clamping point at tip section of clamp arm in alignment with center line of piston rod and clamp arm.
Amount of eccentricity, however, must be within allowable eccentricity shown below.
Using a clamp arm that exceeds allowable eccentricity results in significant eccentric load on link mechanism and piston rod, leading to malfunction.

Eccentric shape clamp arm

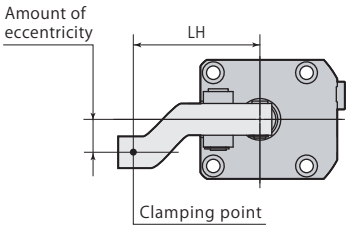

Ordinary clamp arm

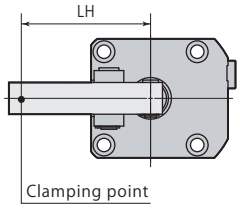

model CLN04 (indicates nonusable range)

Hydraulic pressure MPa	Allowable eccentricity mm — Clamp arm length LH mm							
	25	30	36.5	40	50	60	80	100
7			14	17	26	36	54	60
6.5			16	21	32	44	60	↑
6		10	19	24	39	53	↑	↑
5.5		12	22	28	45	60	↑	↑
5	6	15	27	33	52	↑	↑	↑
4.5	8	18	32	39	60	↑	↑	↑
4	11	23	39	47	↑	↑	↑	↑
3.5	15	29	48	58	↑	↑	↑	↑
3	20	38	60	60	↑	↑	↑	↑
2.5	28	50	↑	↑	↑	↑	↑	↑
2	42	60	↑	↑	↑	↑	↑	↑
1.5	60	60	60	60	60	60	60	60

model CLN05 (indicates nonusable range)

Hydraulic pressure MPa	Allowable eccentricity mm — Clamp arm length LH mm							
	30	35	42	50	60	80	100	120
7			6	6	10	17	25	32
6.5		6	6	10	14	24	34	44
6		6	9	14	21	33	45	58
5.5		6	13	20	28	43	58	60
5	6	8	17	26	36	56	60	↑
4.5	6	11	21	32	45	60	↑	↑
4	7	15	26	39	54	↑	↑	↑
3.5	11	20	33	48	60	↑	↑	↑
3	15	27	43	60	↑	↑	↑	↑
2.5	23	38	58	↑	↑	↑	↑	↑
2	35	56	60	↑	↑	↑	↑	↑
1.5	60	60	60	60	60	60	60	60

model CLN06 (indicates nonusable range)

Hydraulic pressure MPa	Allowable eccentricity mm — Clamp arm length LH mm							
	35	40	50	60	70	80	100	120
7			8	8	8	8	8	8
6.5		8	9	15	17	20	24	26
6		8	14	21	28	32	41	49
5.5	8	11	20	29	38	47	60	73
5	10	15	27	39	50	62	80	80
4.5	14	22	36	51	66	80	↑	↑
4	20	30	49	68	80	↑	↑	↑
3.5	28	41	66	80	↑	↑	↑	↑
3	38	56	80	↑	↑	↑	↑	↑
2.5	53	76	↑	↑	↑	↑	↑	↑
2	78	80	↑	↑	↑	↑	↑	↑
1.5	80	80	80	80	80	80	80	80

model CLN10 (indicates nonusable range)

Hydraulic pressure MPa	Allowable eccentricity mm — Clamp arm length LH mm							
	40	50	56.5	80	100	120	140	160
7		9	9	15	23	31	39	46
6.5		9	10	22	33	44	55	65
6		10	15	31	46	59	74	88
5.5	9	15	21	42	60	79	95	95
5	9	21	29	56	79	95	↑	↑
4.5	11	29	39	74	95	↑	↑	↑
4	16	39	52	95	↑	↑	↑	↑
3.5	22	49	66	↑	↑	↑	↑	↑
3	31	64	85	↑	↑	↑	↑	↑
2.5	45	86	95	↑	↑	↑	↑	↑
2	68	95	↑	↑	↑	↑	↑	↑
1.5	95	95	95	95	95	95	95	95

model CLN16 (indicates nonusable range)

Hydraulic pressure MPa	Allowable eccentricity mm — Clamp arm length LH mm								
	50	60	69.5	80	100	120	140	160	180
7		13	23	35	55	68	81	94	106
6.5		16	28	41	65	89	107	110	110
6	7	20	33	47	74	102	110	↑	↑
5.5	11	25	40	55	86	110	↑	↑	↑
5	14	31	47	65	100	↑	↑	↑	↑
4.5	19	39	57	78	110	↑	↑	↑	↑
4	25	48	70	94	↑	↑	↑	↑	↑
3.5	34	62	88	110	↑	↑	↑	↑	↑
3	47	80	110	↑	↑	↑	↑	↑	↑
2.5	66	110	↑	↑	↑	↑	↑	↑	↑
2	100	↑	↑	↑	↑	↑	↑	↑	↑
1.5	110	110	110	110	110	110	110	110	110

Caution in use

- With link clamps, force acting on link mechanism becomes larger as clamp arm becomes shorter. Exceeding maximum allowable load for link mechanism will lead to malfunction. Depending on clamp arm length, it would be necessary to lower clamping force (hydraulic pressure). Use a clamp at appropriate clamping force that is suitable for clamp arm length, referring to performance diagram and table.

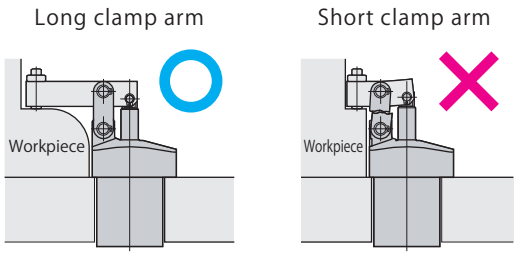

- Determine height and mount clamp, ensuring that clamp arm becomes parallel to clamping surface and mounting surface when workpiece is clamped (allowable angle ±3°).

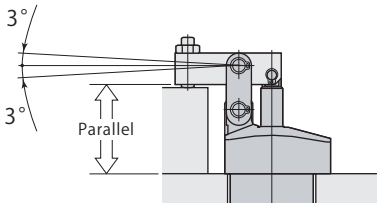

- Using a method such as that shown in the diagram on the right will apply a transverse force on the piston rod and cause the piston rod to break. Please avoid the usage that may apply a non-axial force to the piston rod.

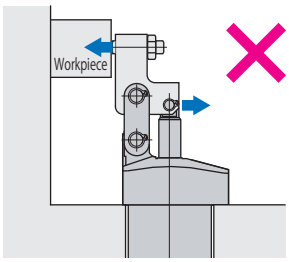

Specifications

(Nil) : Meter-in

Body color : Silver

O : Meter-out

Body color : Black

VCF

G port size

- 01S : G1/8
- 01 : G1/8
- 02 : G1/4
- 03 : G3/8

–

Control method

- (Nil) : Meter-in

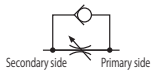

- O : Meter-out

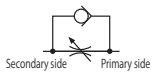

Model		Meter-in				Meter-out			
		VCF01S	VCF01	VCF02	VCF03	VCF01S-O	VCF01-O	VCF02-O	VCF03-O
G port size		G1/8	G1/8	G1/4	G3/8	G1/8	G1/8	G1/4	G3/8
Cracking pressure	MPa	0.04	0.04	0.04	0.04	0.1	0.1	0.1	0.1
Orifice area	mm^2	4.9	4.9	9.6	19.6	3.1	3.1	6.2	12.6
Recommended tightening torque	N·m	10	10	30	35	10	10	30	35
Mass	kg	0.011	0.013	0.024	0.038	0.011	0.013	0.024	0.038

- Pressure range : 0.5–7 MPa
- Proof pressure : 10.5 MPa
- Operating temperature : 0–70 ℃
- Fluid used : General mineral based hydraulic oil (ISO-VG32 equivalent)

Dimensions

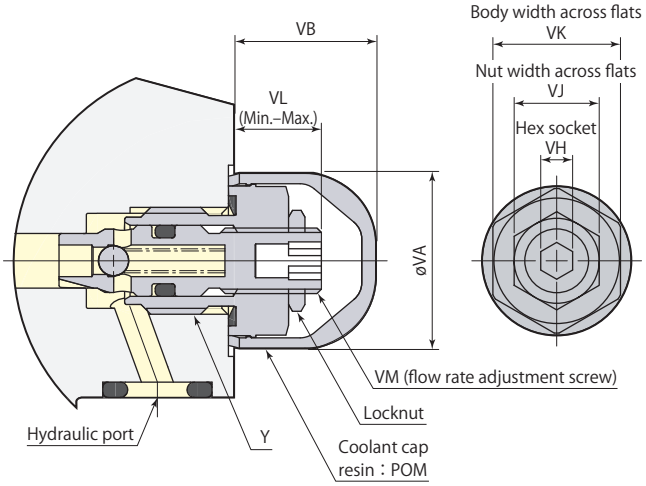

mm

Model	VCF01S VCF01S-O	VCF01 VCF01-O	VCF02 VCF02-O	VCF03 VCF03-O
Y	G1/8	G1/8	G1/4	G3/8
øVA	16	16	21	24
VB	13	13	13	14
VH	3	3	5	6
VJ	8	8	10	14
VK	12	12	17	19
VL	8–11	7–11	7.5–11.5	8.5–12.5
Adjustment screw number of turns	4 rotations	5.3 rotations	5.3 rotations	5.3 rotations
VM	M6×0.75	M6×0.75	M8×0.75	M10×0.75

- Use a closed wrench or socket wrench for mounting and dismounting.
- Flow control valve can be mounted on hydraulic port (G port) when manifold piping.
- Adjust flow rate without hydraulic pressure. Conducting adjustments with hydraulic pressure may result in damaging seal.
- Diagram above indicates mounting for meter-in (VCF□).
- VCF is shipped with the valve fully open. Adjust the flow rate by loosening the screws after it is screwed in to close totally. Tighten the locknut after adjustment is completed.

Applicable clamp and work support

Model	VCF01S	VCF01	VCF02	VCF03
Swing clamp (double acting)	CTM03, 04, 05, 06 CTP04, 05, 06	CTM10 CTU01, 02, 04, 06	CTM16 CTU10, 16	CTU25
Swing clamp (single acting)*	CTN02, 04, 05, 06	CTT01, 02, 04, 06	CTN10, 16 CTT10, 16	CTT25
Swivel clamp (double acting)*	CTS04	CTS06	CTS10, 16	–
Link clamp (double acting)	CLM03, 04 CLP04, 05, 06	CLM05, 06, 10 CLU02, 04, 06	CLM16 CLU10, 16	CLU25
Link clamp (single acting)*	CLN04	CLN05, 06 CLT02, 04, 06	CLN10, 16 CLT10, 16	CLT25
Work lift cylinder	CNB01	CNB02, 04	–	–
Push, pull cylinder	–	CNA02, 04, 06	CNA10, 16	CNA25
Work support*	CSU CSP-D(CSN, CSY)	–	–	–

*: Single acting swing clamp, swivel clamp, single acting link clamp and work support are meter-in only.

Mounting details

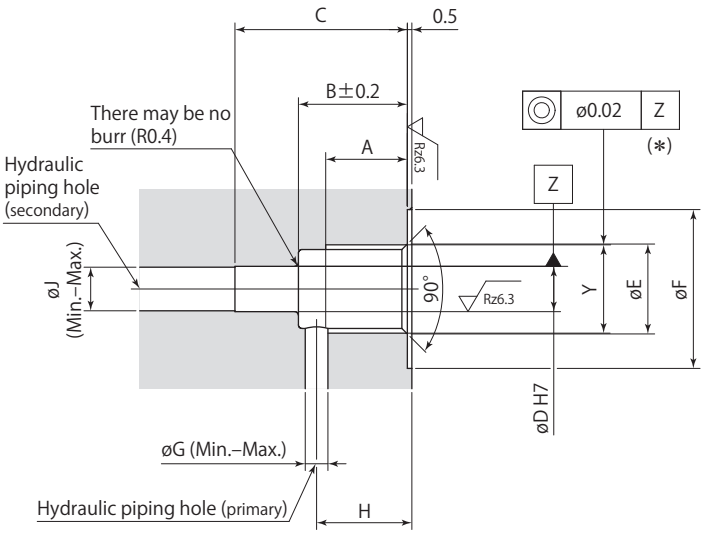

Rz: ISO4287(1997)

mm

Model	VCF01S VCF01S-O	VCF01 VCF01-O	VCF02 VCF02-O	VCF03 VCF03-O
A	9	9	13	13
B	11	13	18	19
C	15.5	17.5	22.5	23.5
øD	$5^{+0.012}_{0}$	$5^{+0.012}_{0}$	$6^{+0.012}_{0}$	$8^{+0.015}_{0}$
øE	9.9	9.9	13.3	16.8
øF	17.5	17.5	21.5	24.5
øG	1.5–2	2.5–3	3.5–5	5–6
H	9–10	9.5–11.5	14.5–15.5	15–16
øJ	2.5–5	2.5–5	3.5–6	5–8
Y	G1/8	G1/8	G1/4	G3/8

*: Concentricity is required when machining øD and Y-portion thread. Misalignment or machining defect may cause the trouble of installation and adjusting flow rate.

Mounting & dismounting of flow control valve, air bleeding valve

- When mounting or dismounting a flow control valve or air bleeding valve, be sure to set pressure within hydraulic circuit to 0 MPa before starting.
- When mounting a flow control valve or air bleeding valve, be sure to tighten it with the recommended tightening torque.
- When mounting a coolant cap (resin: POM), firmly press the body of cover. If it is not mounting properly, use a plastic mallet to tap it into place.
- When dismounting a coolant cap, use a sharp-pointed tool such as a precision screw driver by hooking the notched portion.

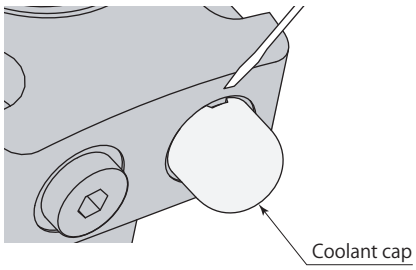

Mounting example

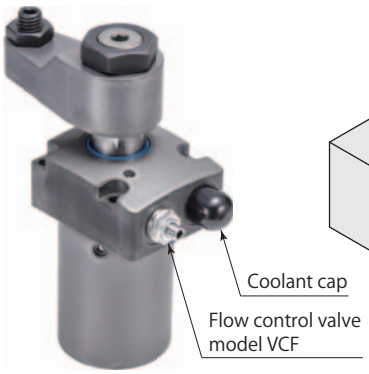

Cylinder mounting

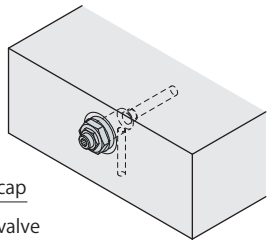

Pallet mounting

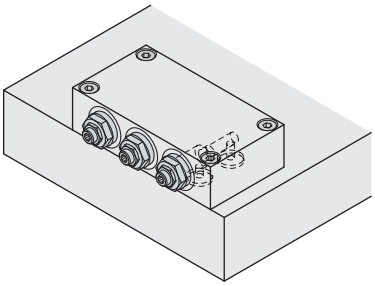

Block mounting ①

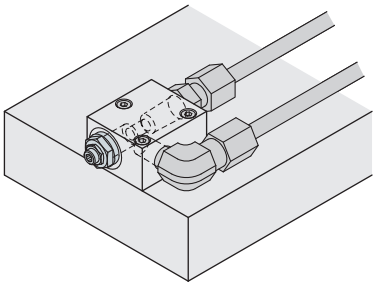

Block mounting ②

Specifications

G port size

VCE

01	: G1/8
02	: G1/4
03	: G3/8

Model	VCE01	VCE02	VCE03
G port size	G1/8	G1/4	G3/8
Recommended tightening torque N·m	10	30	35
Mass kg	0.017	0.029	0.044
Pressure range MPa	0–50		
Operating temperature °C	0–70		
Fluid used	General mineral based hydraulic oil (ISO-VG32 equivalent)		

Dimensions

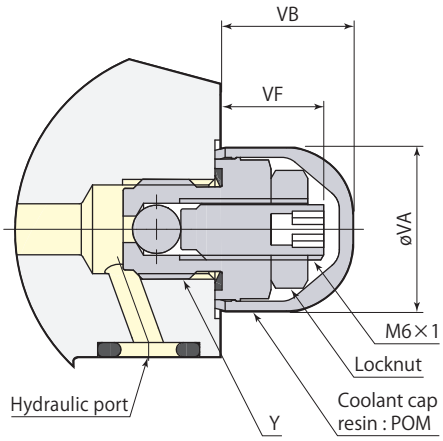

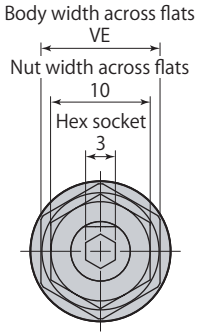

mm

Model	VCE01	VCE02	VCE03
A	9	13	13
B	10	14	14
øE	9.9	13.3	16.8
øF	17.5	21.5	24.5
Y	G1/8	G1/4	G3/8
øVA	16	21	24
VB	13	13	14
VE	12	17	19
VF	10.5	10.5	11.5

- Use a closed wrench or socket wrench for mounting and dismounting.
- Air bleeding valve can be mounted on hydraulic port (G port) when manifold piping.

Mounting details

Rz: ISO4287(1997)

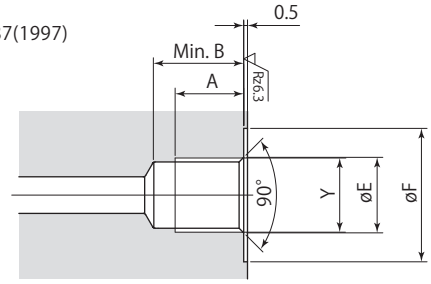

Applicable clamp and work support

Model	VCE01	VCE02	VCE03
Swing clamp (double acting)	CTM03, 04, 05, 06, 10 CTP04, 05, 06 CTU01, 02, 04, 06	CTM16 CTU10, 16	CTU25
Swing clamp (single acting)	CTN02, 04, 05, 06 CTT01, 02, 04, 06	CTN10, 16 CTT10, 16	CTT25
Swivel clamp (double acting)	CTS04, 06	CTS10, 16	–
Link clamp (double acting)	CLM03, 04, 05, 06, 10 CLP04, 05, 06 CLU02, 04, 06	CLM16 CLU10, 16	CLU25
Link clamp (single acting)	CLN04, 05, 06 CLT02, 04, 06	CLN10, 16 CLT10, 16	CLT25
Work lift cylinder	CNB01, 02, 04	–	–
Push, pull cylinder	CNA02, 04, 06	CNA10, 16	CNA25
Work support	CSU CST CSP-D(CSN, CSY, CSK)	–	–

Clamp cylinder		Work lift cylinder model **CNB** **Page →172** Female thread rod Pin rod
Specifications		7MPa Double acting
Features		Low profiled cylinder Built-in sensor model
Variations	Push, pull sensor model	CNB-D **Page →182**
	Push sensor model	CNB-U **Page →192**
	Pull sensor model	CNB-B **Page →202**
	Compact model (without sensor)	CNB-N **Page →210**
	Bottom piping specifications 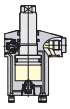	*
Option	Flow control valve	VCF **Page →216**
	Air bleeding valve	VCE **Page →218**

*：Contact Pascal for the details.

Super compact body

The significant downsizing is realized compared to the conventinal model.

Compact model
(without sensor)

Standard model
(without sensor)

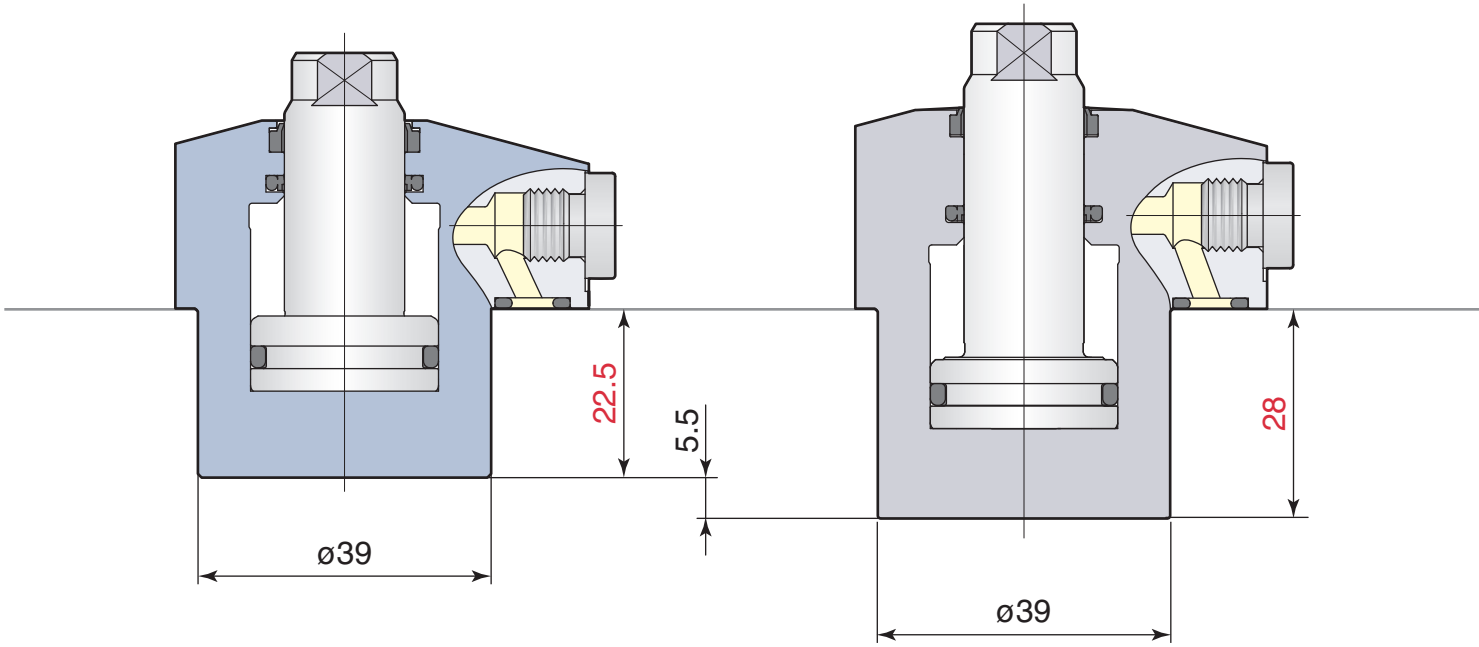

		model CNB02-15TN	model CNA02-15T
Cylinder force (at 7MPa)	Push	3.4 kN	3.4 kN
	Pull	2.0 kN	2.0 kN

Super compact body

Enables a jig to be compact and simple structure with an excellent sensor function

Push, pull sensor model

Air sensor model

Push, pull detection

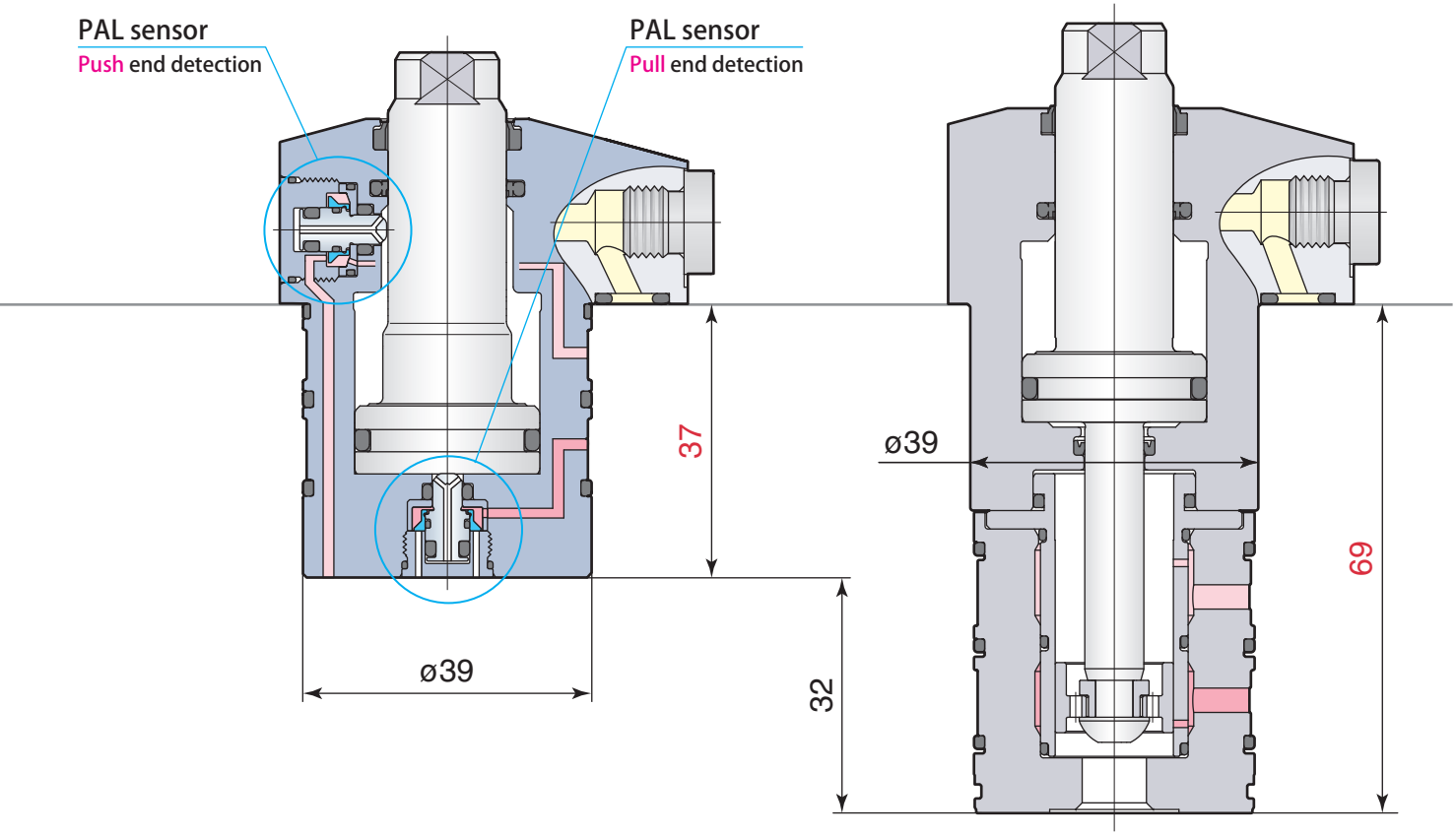

model CNB02-15TD	model CNA02-15TA
3.4 kN	3.1 kN
2.0 kN	2.0 kN

Table of contents

Structure, Hydraulic and pneumatic circuit diagram 174

Specifications 176

Piping 177

Push, pull sensor model **CNB-D**

- PAL sensor function and structure 178
- Sensor signal detection 180
- Female thread rod **CNB-TD** Dimensions 182
- Pin rod **CNB-PD** Dimensions 184
- Mounting details 186

Push sensor model **CNB-U**

- PAL sensor function and structure 189
- Sensor signal detection 190
- Female thread rod **CNB-TU** Dimensions 192
- Pin rod **CNB-PU** Dimensions 194
- Mounting details 196

Pull sensor model **CNB-B**

- PAL sensor function and structure 199
- Sensor signal detection 200
- Female thread rod **CNB-TB** Dimensions 202
- Pin rod **CNB-PB** Dimensions 204
- Mounting details 206

Compact model **CNB-N**

- Female thread rod **CNB-TN** Dimensions 210
- Pin rod **CNB-PN** Dimensions 212
- Mounting details 214

Comparison dimensional 215

Flow control valve **VCF** 216

Air bleeding valve **VCE** 218

Sensing Work lift cylinder

Double acting 7 MPa

model CNB

Pull sensor model
model CNB02-15TB

Compact model
model CNB02-15TN

Push, pull sensor model
model CNB02-15TD

Push sensor model
model CNB02-15TU

Push, pull sensor model D

model **CNB□-□□D** PAT.

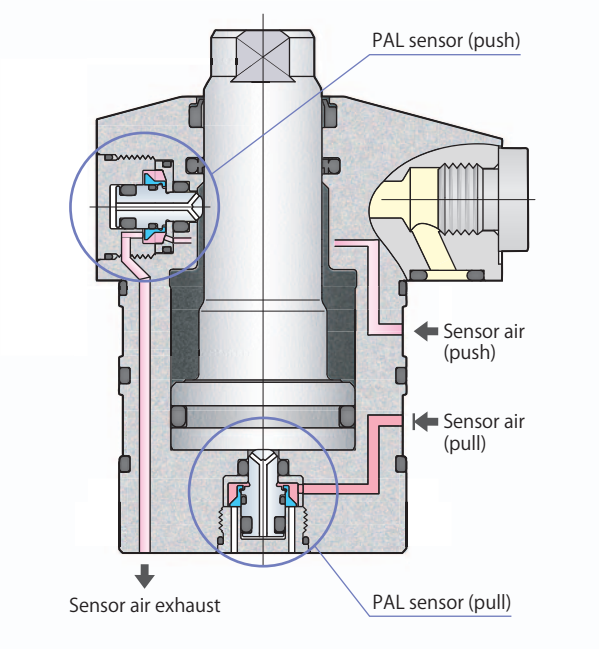

Hydraulic and pneumatic circuit diagram

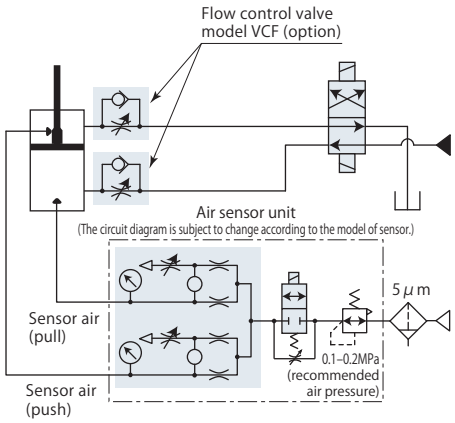

Specifications	page → 176
Piping	page → 177
PAL sensor	page → 178
Dimensions	page → 182
Mounting details	page → 186

Push sensor model U

model **CNB□-□□U** PAT.

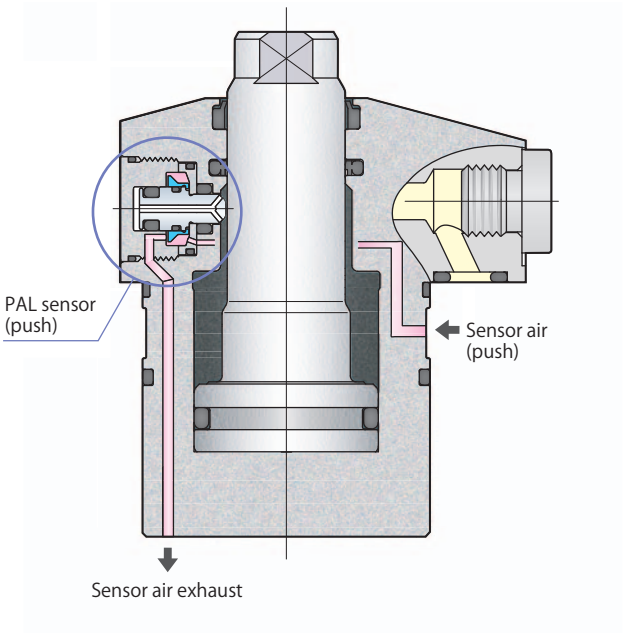

Hydraulic and pneumatic circuit diagram

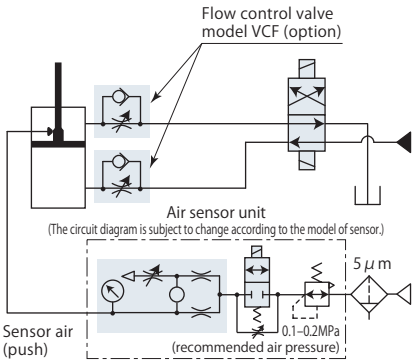

Specifications	page → 176
Piping	page → 177
PAL sensor	page → 189
Dimensions	page → 192
Mounting details	page → 196

Pull sensor model B

model **CNB□-□□B** PAT.

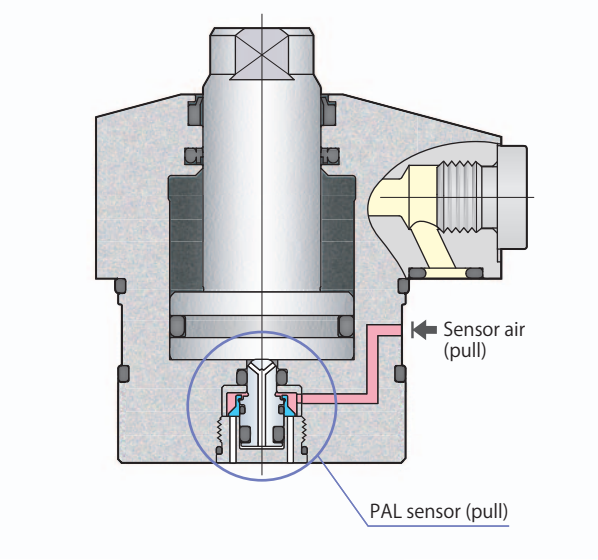

Hydraulic and pneumatic circuit diagram

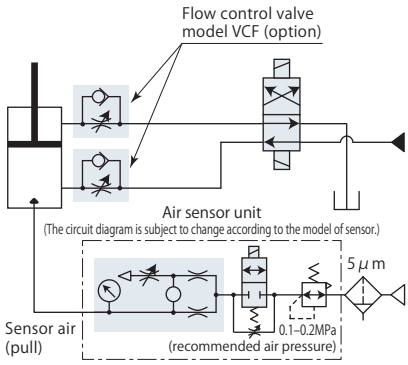

Specifications	page → 176
Piping	page → 177
PAL sensor	page → 199
Dimensions	page → 202
Mounting details	page → 206

Compact model N

model **CNB□-□□N**

No sensors available on compact model

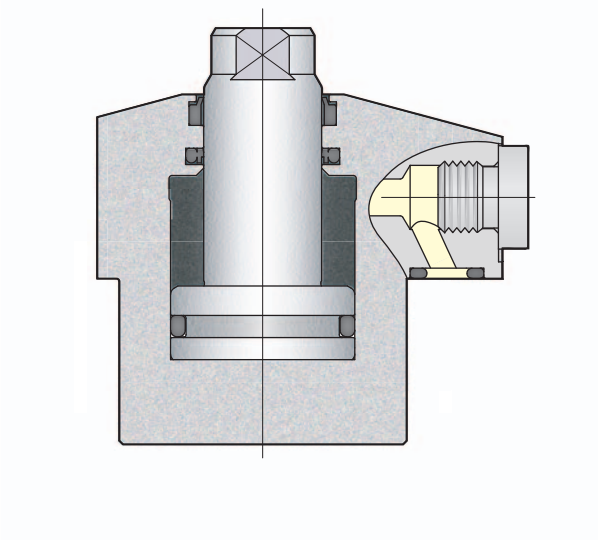

Hydraulic circuit diagram

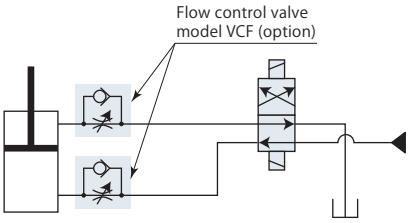

Specifications	page → 176
Piping	page → 177
Dimensions	page → 210
Mounting details	page → 214

Specifications

	Size		Stroke	Rod tip section shapes	
CNB	01	–	10	T : Female thread rod	D : Push, pull sensor model
	02		15		U : Push sensor model
	04		20	P : Pin rod	B : Pull sensor model
			25		N : Compact model
			30		
			35		
			40		
			45		
			50		

indicates made to order. Inquire for details about bottom piping specifications.

Rod tip section shapes

T : Female thread rod

P : Pin rod

Model			CNB01	CNB02	CNB04
Cylinder force (hydraulic pressure 7MPa)	Push	kN	2.7	3.4	4.9
	Pull	kN	1.6	2.0	3.2
Cylinder force calculation formula*1	Push		F=0.38×P	F=0.49×P	F=0.71×P
	Pull		F=0.23×P	F=0.29×P	F=0.45×P
Cylinder inner diameter		mm	22	25	30
Rod diameter		mm	14	16	18
Effective area	Push	cm^2	3.8	4.9	7.1
	Pull	cm^2	2.3	2.9	4.5
Max. oil flow rate		L/min	0.8	1.0	1.6
Recommended tightening torque of mounting screws*2		N·m	3.5	7	7

- Pressure range：1.5–7 MPa (model CNB-D, CNB-U, CNB-B), 0.5–7 MPa (model CNB-N)
- Proof pressure：10.5 MPa
- Operating temperature：0–70 ℃
- Fluid used：General mineral based hydraulic oil (ISO-VG32 equivalent)
- Seals are resistant to chlorine-based cutting fluid. (not thermal resistant specification)

*1：F=Cylinder force (kN), P=Hydraulic pressure (MPa)　*2：ISO R898 class 12.9

Manifold piping and G port piping are available.

Manifold piping

When choosing manifold piping, a flow control valve (model VCF) and an air bleeding valve (model VCE) are mountable on the G ports of the cylinder.

G port piping

Remove plugs when choosing G port piping. (O-ring must be used.) Refer to **page →220** for details on G port piping flareless fitting. The flow control valve and the air bleeding valve should be installed in the middle of oil path.

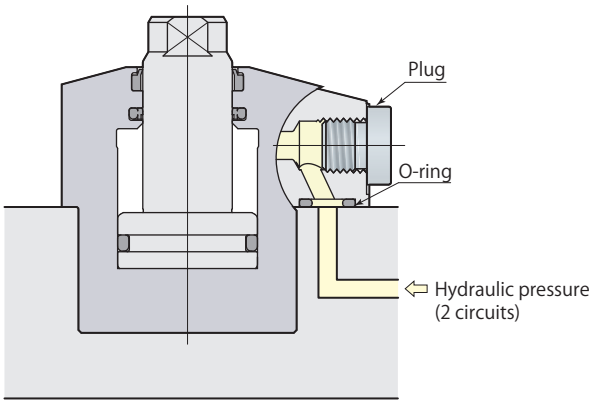

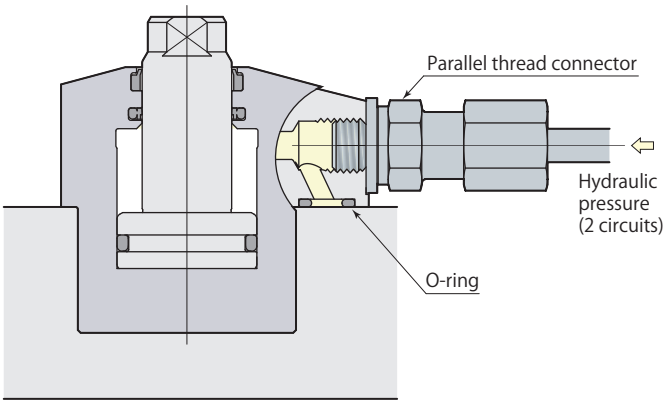

Flow control valve model VCF

Page →216

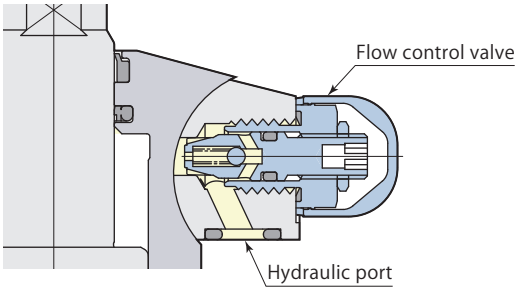

Air bleeding valve model VCE

Page →218

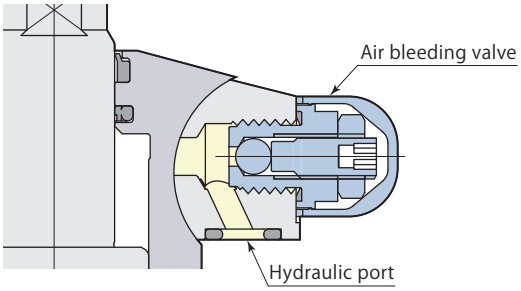

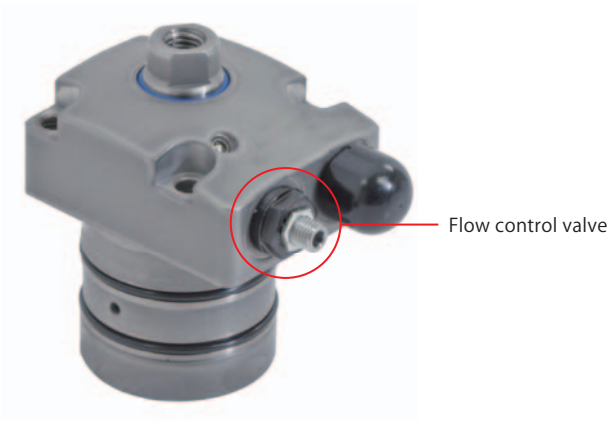

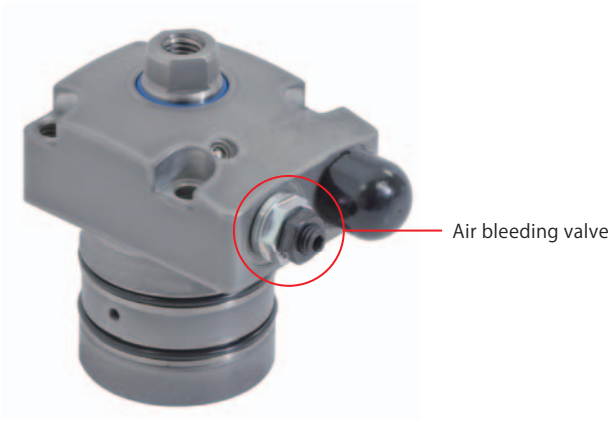

● In case of mounting flow control valve model VCF on the G port of the cylinder, air bleeding valve should be installed in the piping to the cylinder. (VCE Mounting details. Refer to **page →218**)

PAL sensor function and structure

Push end detection

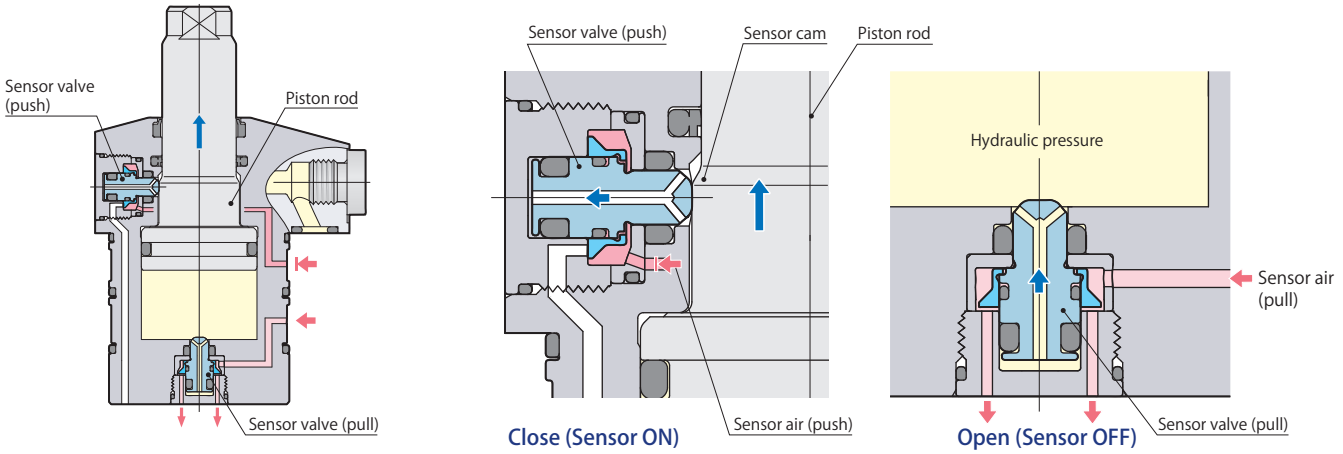

● The sensor valve (push) is pushed down by the sensor cam and shuts off the sensor air flow when the piston rod reaches the push end position. The sensor valve (pull) is pushed up by the hydraulic force to open for air exhaust and detects the push end position.

In the middle of stroke

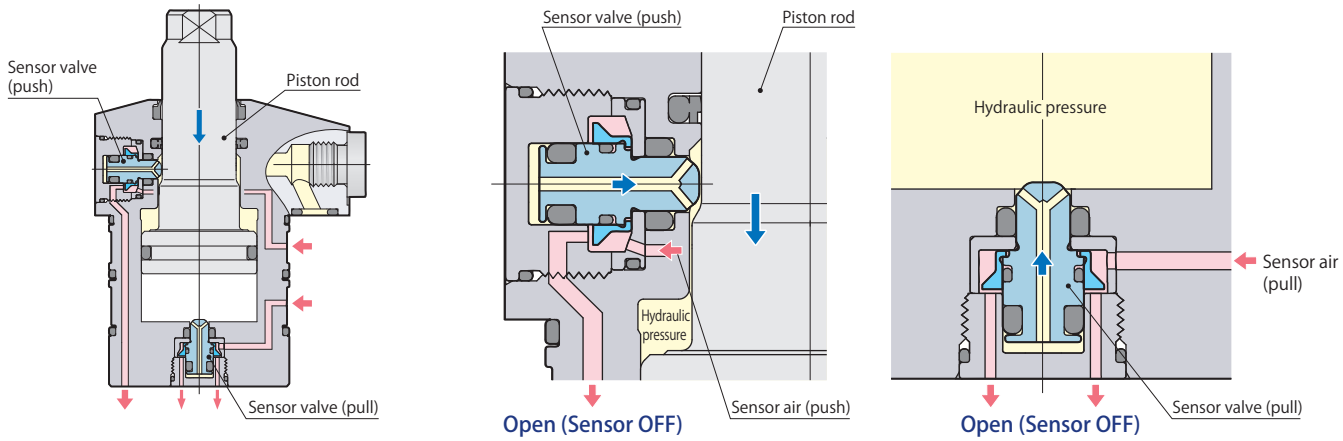

● The sensor valve (push) is pushed up by the hydraulic force while piston rod strokes and exhausts the sensor air. The sensor valve (pull) is pushed up by the hydraulic force and exhausts the sensor air.

PAL sensor function and structure

Pull end detection

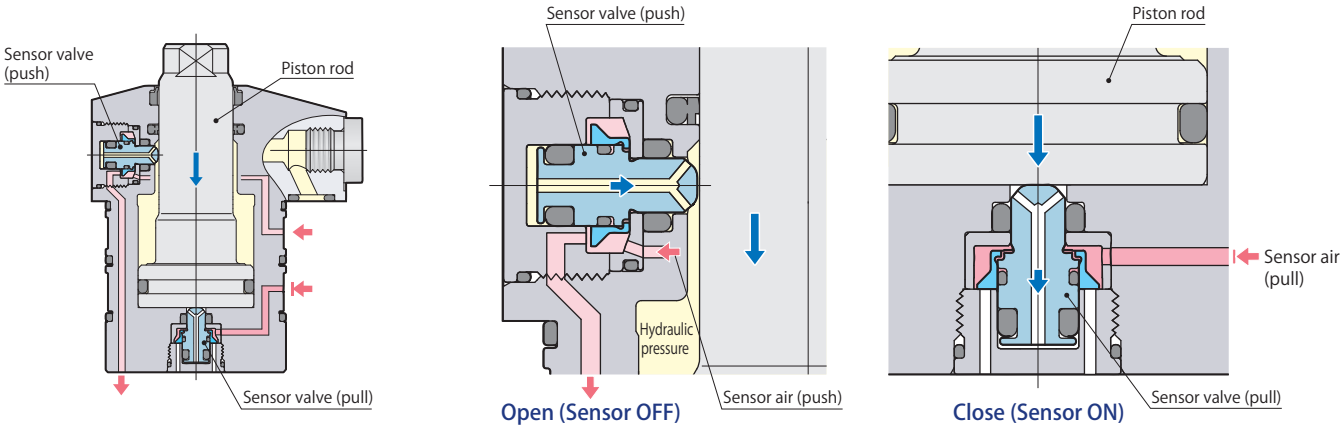

● The sensor valve (pull) is pushed down by the piston rod and shuts off the sensor air flow when the piston rod reaches the pull end position. The sensor valve (push) is pushed up by the hydraulic force to open for air exhaust and detects the pull end position.

Push end, Pull end detection signal

Push end detection

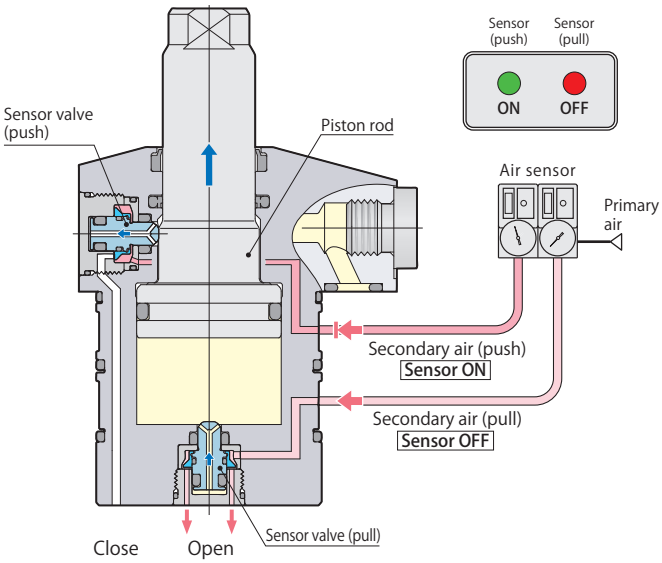

The sensor may not work correctly when the cylinder is not pressurized by hydraulic force because the piston of the clamp moves under such environment. Keep supplying hydraulic force the cylinder all the times.

Sensor signal (push)	ON	Push end
Sensor signal (pull)	OFF	

In the middle of stroke

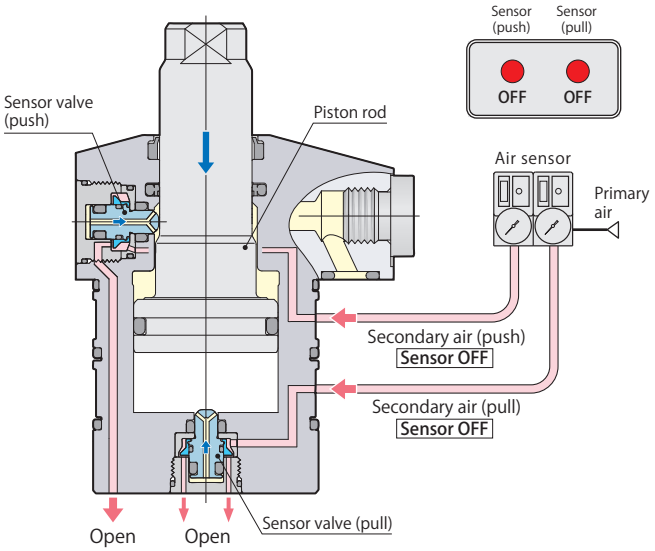

Sensor signal (push)	OFF	In the middle of stroke
Sensor signal (pull)	OFF	

More than 1.5MPa hydraulic pressure is required to operate the sensor valve. To obtain OFF signal in the middle of the valve stroke, over 1.5MPa of back pressure should be produced by using a meter-out type of flow control valve.

In the middle of stroke

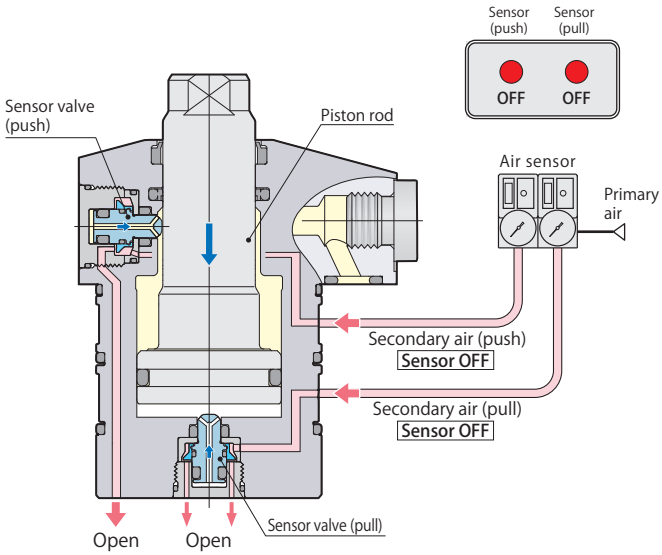

Sensor signal (push)	OFF	In the middle of stroke
Sensor signal (pull)	OFF	

Pull end detection

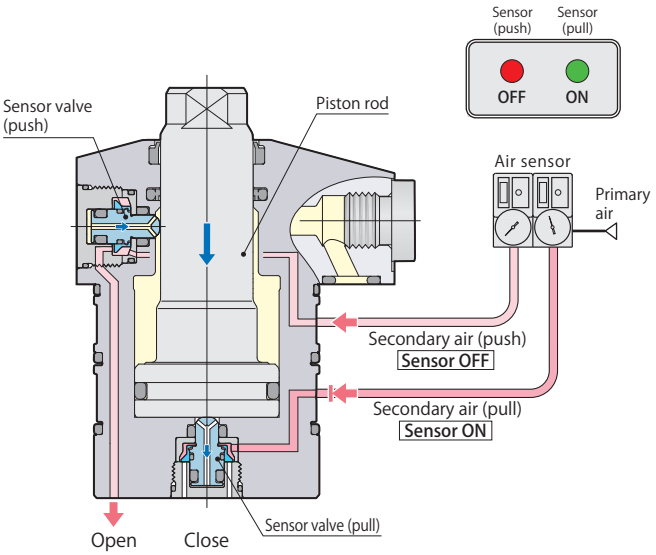

The sensor may not work correctly when the cylinder is not pressurized by hydraulic force because the piston of the clamp moves under such environment. Keep supplying hydraulic force the cylinder all the times.

Sensor signal (push)	OFF	Pull end
Sensor signal (pull)	ON	

More than 1.5MPa hydraulic pressure is required to operate the sensor valve. To obtain OFF signal in the middle of the valve stroke, over 1.5MPa of back pressure should be produced by using a meter-out type of flow control valve.

Air sensor triggering point

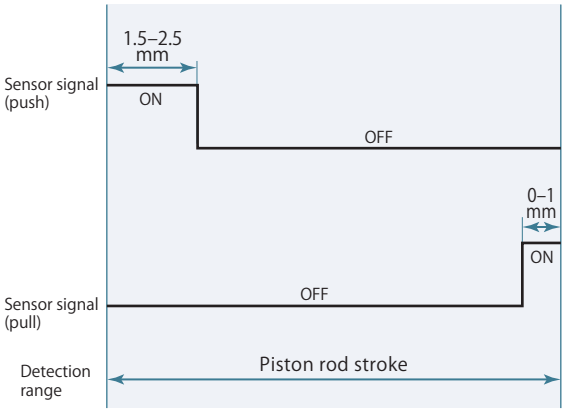

- Refer to the sensor supplier's instruction manual for the details of setting.
- Sensing performance such as detectable time and pressure differs depending on the supplier and model number of the sensor. Select the right model referring to sensor's application and characteristics.

Air sensor unit recommended condition of use

Supplier and model	ISA3-F/G series manufactured by SMC
	GPS2-05, GPS3-E series manufactured by CKD
Air supply pressure	0.1–0.2 MPa
Inner diameter of piping	ø4 mm (ISA3-F：ø2.5 mm)
Overall piping length	5 m or less

- Supply the dry and filtered air. Particulate size 5 μm or less is recommended.
- Use a solenoid valve with needle for air sensor unit and control it supplying air all the time in order to eliminate intrusion of chips or coolant.
- There is a case that air sensing cannot be successfully made as designed when it is used out of the above usage. Contact Technical service center for more details.

Relation between sensor air pressure, PAL sensor and piston stroke

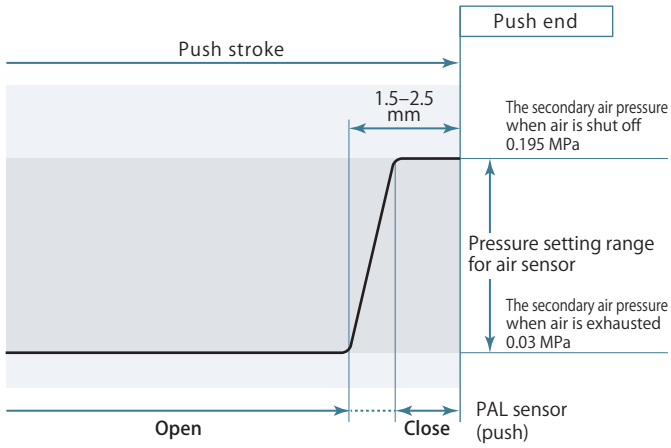

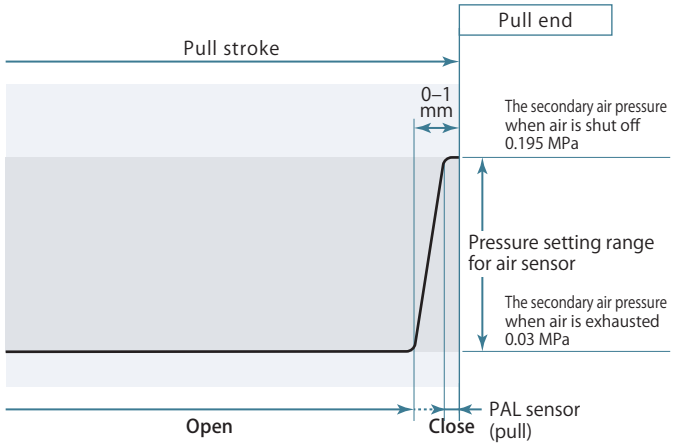

The diagram shown on the left indicates the relation between the PAL sensor, piston stroke, and secondary air pressure. (The pressure shown in the diagram is a reference based on the 0.2 MPa of primary air pressure for one piece of cylinder.)

Since the new PAL sensor works with less air-leakage compared to previous sensor valve,

- Enhances the pressure setting range of the sensor which enables the sensor to set easily.
  (Ex. Pressure setting range 0.03–0.195 MPa in the diagram)
- Allows the use for a number of cylinders by one air sensor because of better pressure holding when air is shut off. (Maximum number of cylinders to be detected by one sensor is 10.)
- Allows to choose less air-consumed, i.e. small orifice diameter type, air sensor.
- Can create large differential-pressure when opening and closing the PAL sensor so that sensor primary pressure can be set as low as possible and reduce the consumption of air.

New PAL sensor

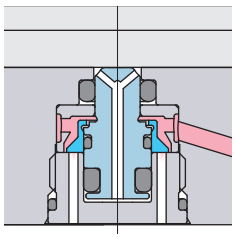

Poppet structure ensures superior sealing performance and can create large differential-pressure when the valve is opening and closing, and air leakage can be minimized.

Previous sensor valve

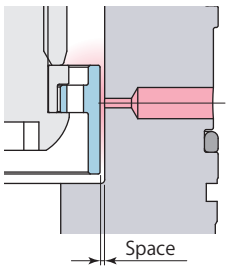

Air leaks easily due to a large space.

Dimensions

(Female thread rod)

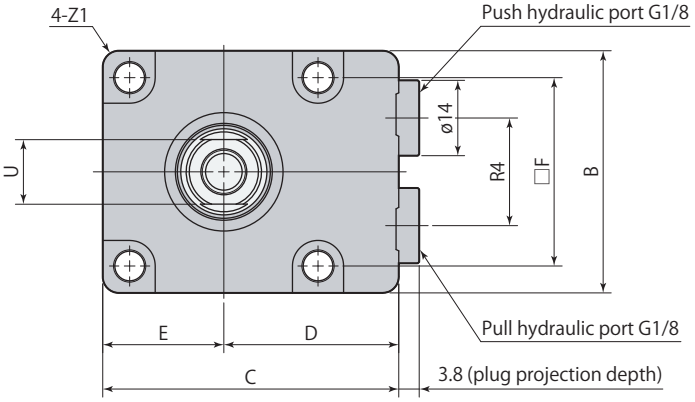

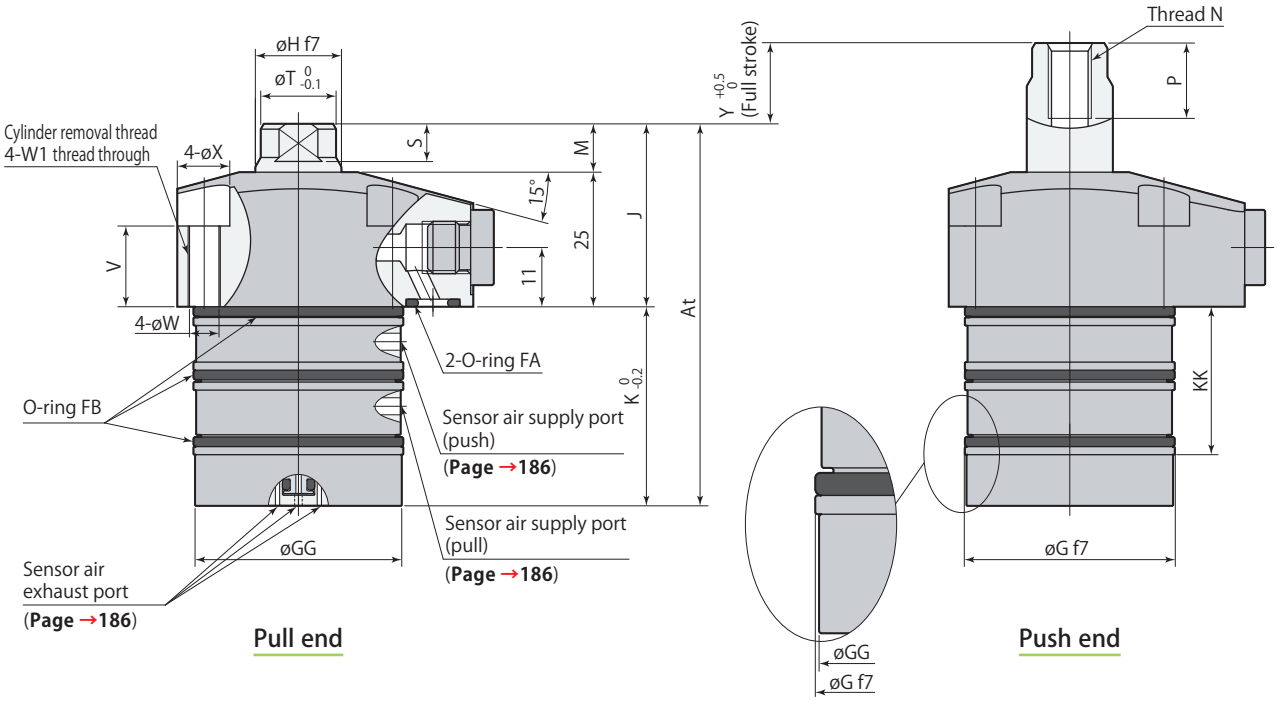

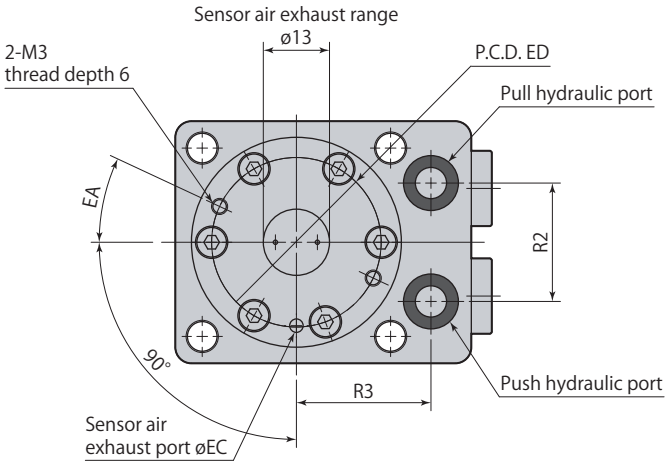

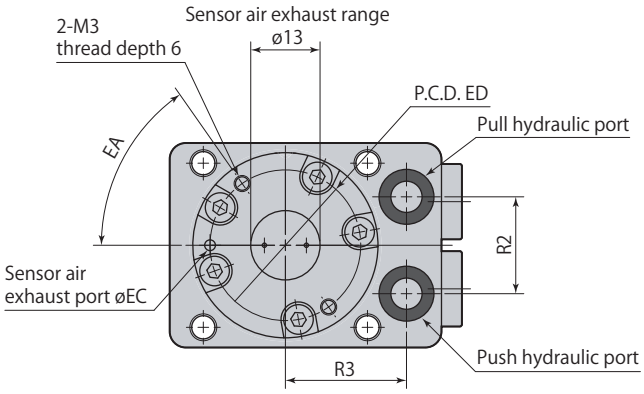

CNB01-□TD

● Mounting screws are not included.

mm

Model		CNB01-□TD		CNB02-□TD		CNB04-□TD		
Y (stroke)		10, 15, 20, 25, 30, 35, 40, 45, 50						
Cylinder capacity (cm³)	Push	0.38×Y		0.49×Y		0.71×Y		
	Pull	0.23×Y		0.29×Y		0.45×Y		
At		Y=10	Y=15–50	Y=10	Y=15–50	Y=10	Y=15–50	
		70	Y+55	71	Y+56	73.5	Y+58.5	
B		38		45		50		
C		50.5		55		60		
D		29		32.5		35		
E		21.5		22.5		25		
F		30.5		35		40		
øG		$35^{-0.025}_{-0.050}$		$39^{-0.025}_{-0.050}$		$47^{-0.025}_{-0.050}$		
øGG		34.4		38.4		46.4		
øH		$14^{-0.016}_{-0.034}$		$16^{-0.016}_{-0.034}$		$18^{-0.016}_{-0.034}$		
J		33		34		35		
K		Y=10	Y=15–50	Y=10	Y=15–50	Y=10	Y=15–50	
		37	Y+22	37	Y+22	38.5	Y+23.5	
KK		Y=10, 15	Y=20–50	Y=10, 15	Y=20–50	Y=10, 15	Y=20	Y=25–50
		27.5	32.5	27.5	32.5	29	34	32.5
M		8		9		10		
N		M6×1		M8×1.25		M8×1.25		
P		11		14		14		
R2		18		22		24		
R3		22.5		25		28		
R4		16.2		20		22		
S (width across flats height)		6		7		8		
øT		12		14		16		
U (width across flats)		10		12		14		
V		17		15		15		
øW		4.5		5.5		5.5		
W1		M5×0.8		M6×1		M6×1		
øX		8		9.5		9.5		
Z1		R3		R3		R5		
EA		55°		25°		20°		
øEC		2		2.5		3.3		
ED		28		31.5		38		
O-ring FA (fluorocarbon hardness Hs90)		P7		P7		P7		
O-ring FB (fluorocarbon hardness Hs70)		AS568-026		AS568-028		AS568-030		
Flow control valve*	Meter-in	VCF01S		VCF01		VCF01		
	Meter-out	VCF01S-O		VCF01-O		VCF01-O		
Air bleeding valve		VCE01		VCE01		VCE01		

∗: Select the right model of VCF according to the size of the cylinder.

Refer to each page for the details of options. ● Flow control valve **page →216** ● Air bleeding valve **page →218**

● CNB□-□TD (Push, pull sensor model, Female thread rod) stroke 25, 35, 45 mm are made to order.

Mass

kg

Stroke	10	15	20	25	30	35	40	45	50
CNB01-□TD	0.6	0.6	0.7	0.7	0.7	0.7	0.7	0.8	0.8
CNB02-□TD	0.7	0.7	0.7	0.8	0.8	0.9	0.9	1.0	1.0
CNB04-□TD	0.9	0.9	1.0	1.0	1.1	1.1	1.2	1.2	1.3

Dimensions

(Pin rod)

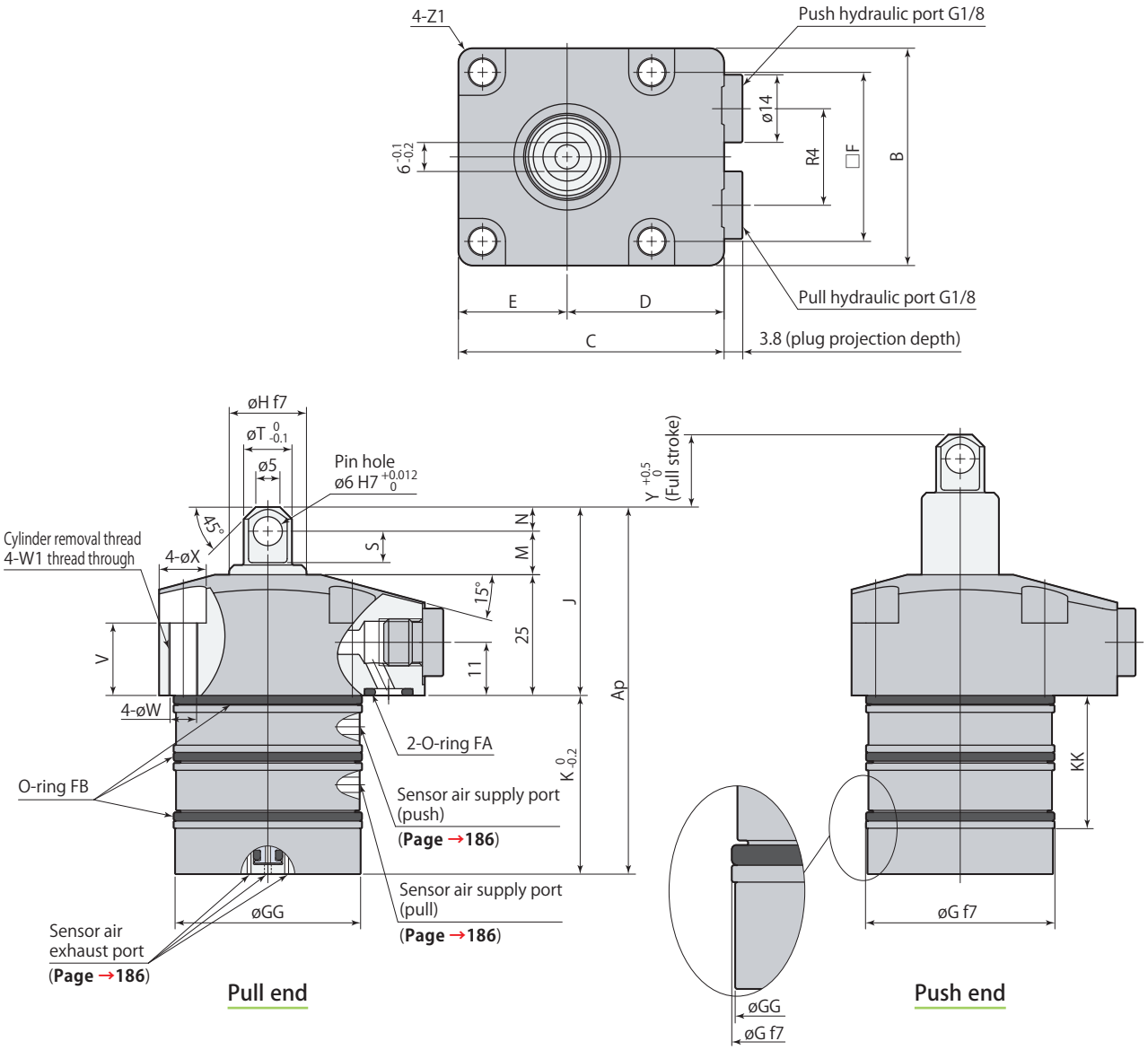

Pull end

Push end

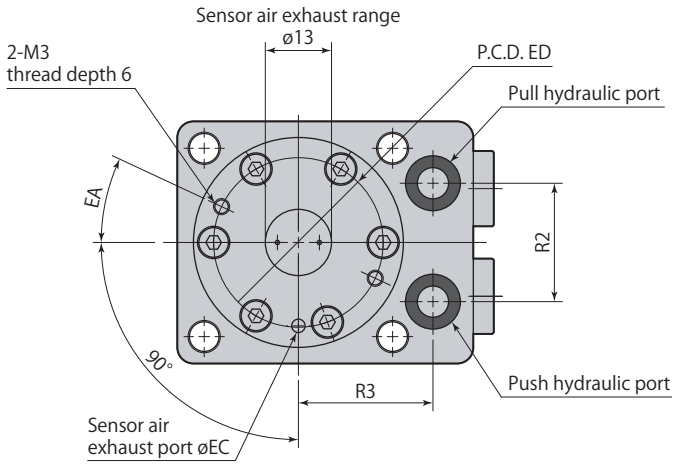

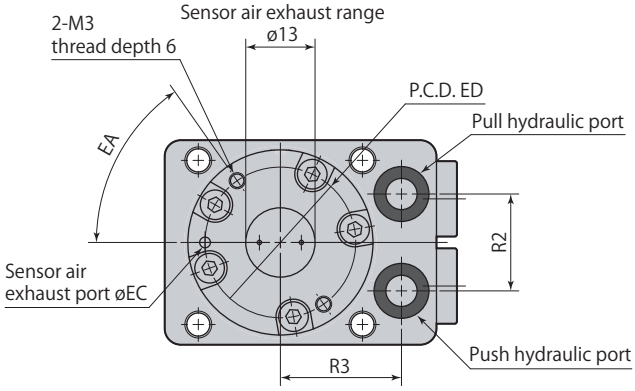

CNB01-□PD

- Mounting screws are not included.
- Recommended material for pin：SCM435-H (HB269–331)

mm

Model		CNB01-□PD		CNB02-□PD		CNB04-□PD		
Y (stroke)		10, 15, 20, 25, 30, 35, 40, 45, 50						
Cylinder capacity (cm³)	Push	0.38×Y		0.49×Y		0.71×Y		
	Pull	0.23×Y		0.29×Y		0.45×Y		
Ap		Y=10	Y=15–50	Y=10	Y=15–50	Y=10	Y=15–50	
		76	Y+61	76	Y+61	79	Y+64	
B		38		45		50		
C		50.5		55		60		
D		29		32.5		35		
E		21.5		22.5		25		
F		30.5		35		40		
øG		$35^{-0.025}_{-0.050}$		$39^{-0.025}_{-0.050}$		$47^{-0.025}_{-0.050}$		
øGG		34.4		38.4		46.4		
øH		$14^{-0.016}_{-0.034}$		$16^{-0.016}_{-0.034}$		$18^{-0.016}_{-0.034}$		
J		39		39		40.5		
K		Y=10	Y=15–50	Y=10	Y=15–50	Y=10	Y=15–50	
		37	Y+22	37	Y+22	38.5	Y+23.5	
KK		Y=10, 15	Y=20–50	Y=10, 15	Y=20–50	Y=10, 15	Y=20	Y=25–50
		27.5	32.5	27.5	32.5	29	34	32.5
M		9		9		9.5		
N		5		5		6		
R2		18		22		24		
R3		22.5		25		28		
R4		16.2		20		22		
S		6.5		6.5		7		
øT		10		10		12		
V		17		15		15		
øW		4.5		5.5		5.5		
W1		M5×0.8		M6×1		M6×1		
øX		8		9.5		9.5		
Z1		R3		R3		R5		
EA		55°		25°		20°		
øEC		2		2.5		3.3		
ED		28		31.5		38		
O-ring FA (fluorocarbon hardness Hs90)		P7		P7		P7		
O-ring FB (fluorocarbon hardness Hs70)		AS568-026		AS568-028		AS568-030		
Flow control valve*	Meter-in	VCF01S		VCF01		VCF01		
	Meter-out	VCF01S-O		VCF01-O		VCF01-O		
Air bleeding valve		VCE01		VCE01		VCE01		

*: Select the right model of VCF according to the size of the cylinder.

Refer to each page for the details of options. ● Flow control valve **page →216** ● Air bleeding valve **page →218**

● CNB□-□PD (Push, pull sensor model, Pin rod) are made to order.

Mass

kg

Stroke	10	15	20	25	30	35	40	45	50
CNB01-□PD	0.6	0.6	0.7	0.7	0.7	0.7	0.7	0.8	0.8
CNB02-□PD	0.7	0.7	0.7	0.8	0.8	0.9	0.9	1.0	1.0
CNB04-□PD	0.9	0.9	1.0	1.0	1.1	1.1	1.2	1.2	1.3

Mounting details

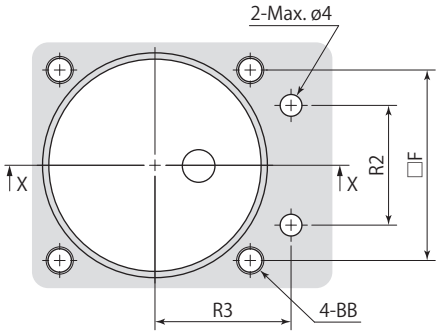

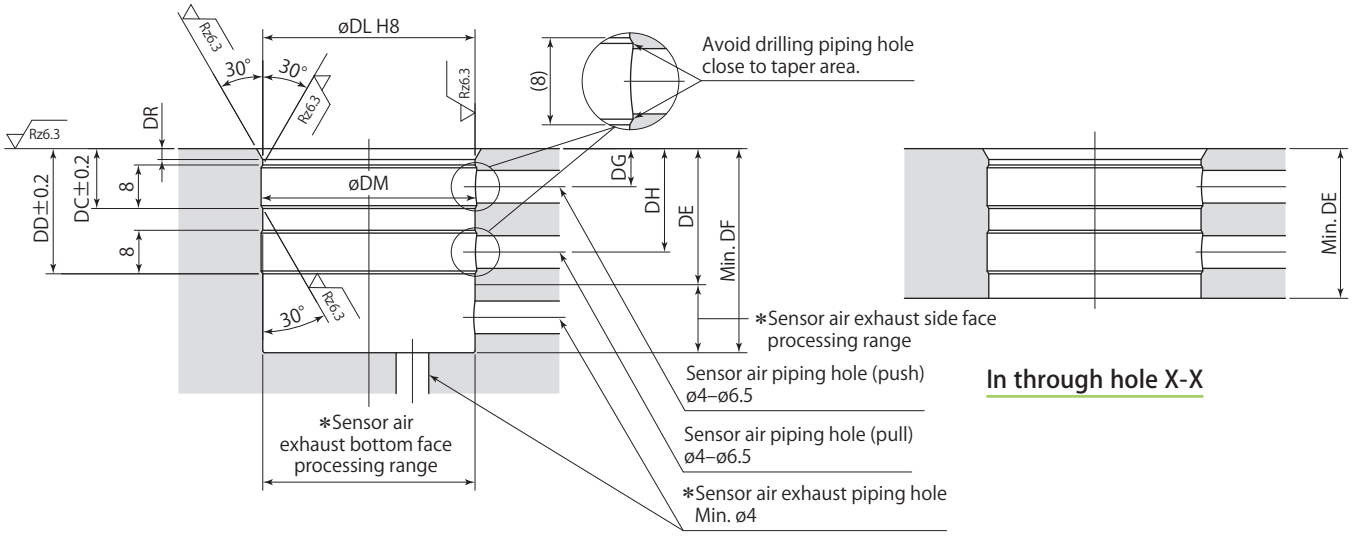

In through hole X-X

In blind hole X-X

∗: Sensor air exhaust piping hole must be made on either side or bottom face.

Rz: ISO4287(1997)

- Apply an appropriate amount of grease to the chamfer and the bore when mounting. Excessive grease may be a blockage in the air passage, causing malfunction of the sensor.
- The 30° taper machining must be provided to avoid the damage of the O-ring. Ensure that there are no interference on taper area when drilling the hole for sensor air.
- The sensor air piping hole can be used for a pilot hole of Rc 1/16 plug.

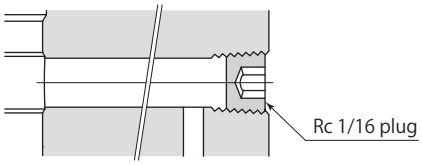

mm

Model	CNB01-□TD CNB01-□PD								
Stroke	10	15	20	25	30	35	40	45	50
DC	11	11	16	16	16	16	16	16	16
DD	23	23	28	28	28	28	28	28	28
DE	27.5	27.5	32.5	32.5	32.5	32.5	32.5	32.5	32.5
DF	37.5	37.5	42.5	47.5	52.5	57.5	62.5	67.5	72.5
DG	7	7	12	12	12	12	12	12	12
DH	19	19	24	24	24	24	24	24	24
øDL	$35^{+0.039}_{0}$								
øDM	35.6								
DR	2	2	1	1	1	1	1	1	1
BB	M4								
F	30.5								
R2	18								
R3	22.5								

mm

Model	CNB02-□TD CNB02-□PD								
Stroke	10	15	20	25	30	35	40	45	50
DC	11	11	16	16	16	16	16	16	16
DD	23	23	28	28	28	28	28	28	28
DE	27.5	27.5	32.5	32.5	32.5	32.5	32.5	32.5	32.5
DF	37.5	37.5	42.5	47.5	52.5	57.5	62.5	67.5	72.5
DG	7	7	12	12	12	12	12	12	12
DH	19	19	24	24	24	24	24	24	24
øDL	$39^{+0.039}_{0}$								
øDM	39.6								
DR	2	2	1	1	1	1	1	1	1
BB	M5								
F	35								
R2	22								
R3	25								

mm

Model	CNB04-□TD CNB04-□PD								
Stroke	10	15	20	25	30	35	40	45	50
DC	11	11	16	16	16	16	16	16	16
DD	23	23	28	28	28	28	28	28	28
DE	27.5	27.5	32.5	32.5	32.5	32.5	32.5	32.5	32.5
DF	39	39	44	49	54	59	64	69	74
DG	7	7	12	12	12	12	12	12	12
DH	19	19	24	24	24	24	24	24	24
øDL	$47^{+0.039}_{0}$								
øDM	47.6								
DR	2	2	1	1	1	1	1	1	1
BB	M5								
F	40								
R2	24								
R3	28								

Push PAL sensor function and structure

In the middle of stroke

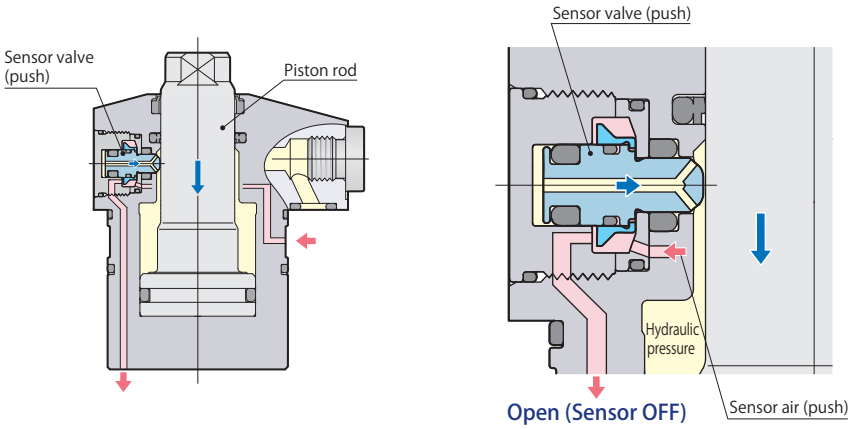

- The sensor valve (push) is pushed up by the hydraulic force and exhausts the sensor air while piston rod strokes.

Push end detection

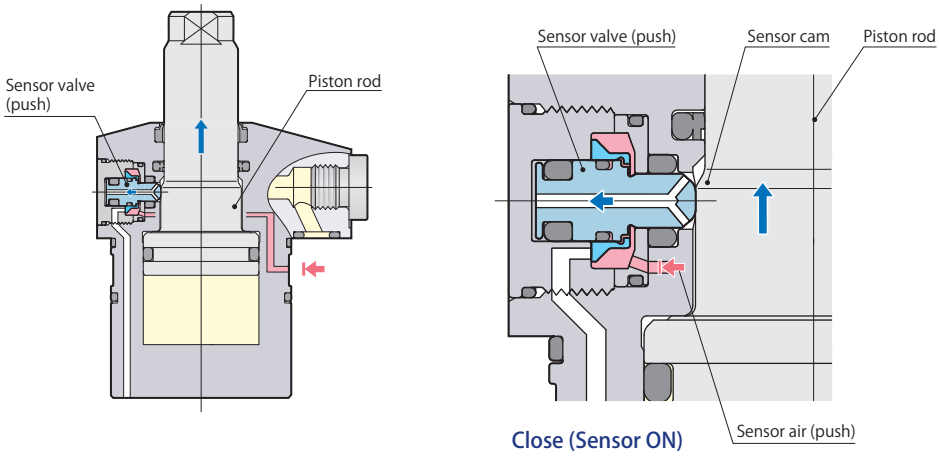

- The sensor valve (push) is pushed down by the sensor cam and shuts off the sensor air flow when the piston rod reaches the push end position, and detects the push end position.

Push end detection signal

In the middle of stroke

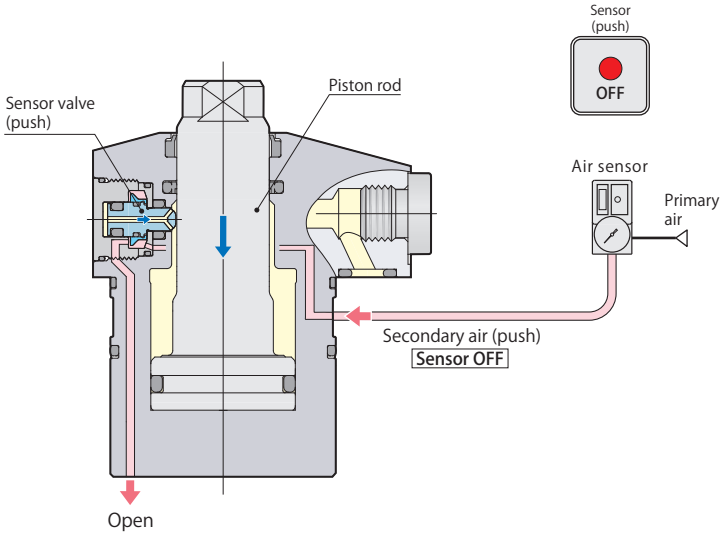

Sensor signal (push)	OFF	Pull end, in the middle of stroke

More than 1.5MPa hydraulic pressure is required to operate the sensor valve. To obtain OFF signal in the middle of the valve stroke, over 1.5MPa of back pressure should be produced by using a meter-out type of flow control valve.

Push end detection

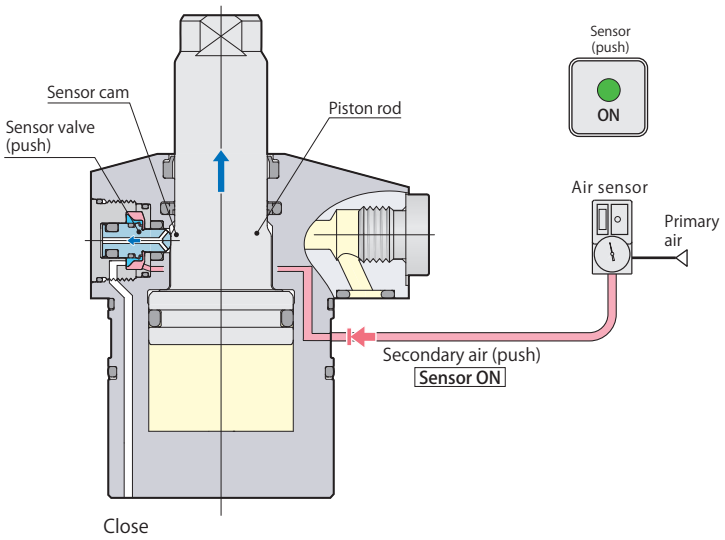

The sensor may not work correctly when the cylinder is not pressurized by hydraulic force because the piston of the clamp moves under such environment. Keep supplying hydraulic force the cylinder all the times.

Sensor signal (push)	ON	Push end

Air sensor triggering point

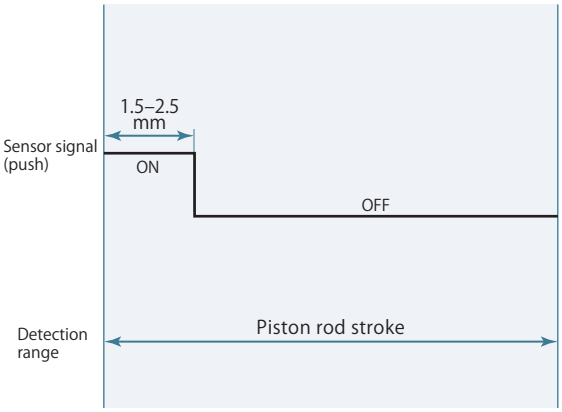

- Refer to the sensor supplier's instruction manual for the details of setting.
- Sensing performance such as detectable time and pressure differs depending on the supplier and model number of the sensor. Select the right model referring to sensor's application and characteristics.

Air sensor unit recommended condition of use

Supplier and model	ISA3-F/G series manufactured by SMC
	GPS2-05, GPS3-E series manufactured by CKD
Air supply pressure	0.1–0.2 MPa
Inner diameter of piping	ø4 mm (ISA3-F：ø2.5 mm)
Overall piping length	5 m or less

- Supply the dry and filtered air. Particulate size 5 μm or less is recommended.
- Use a solenoid valve with needle for air sensor unit and control it supplying air all the time in order to eliminate intrusion of chips or coolant.
- There is a case that air sensing cannot be successfully made as designed when it is used out of the above usage. Contact Technical service center for more details.

Relation between sensor air pressure, PAL sensor and piston stroke

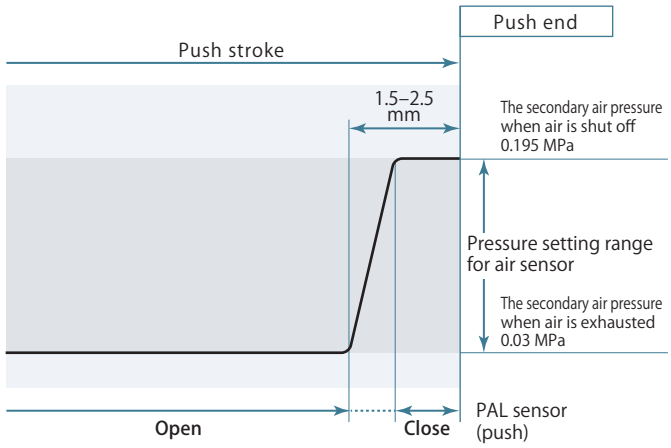

The diagram shown above indicates the relation between the PAL sensor, piston stroke, and secondary air pressure. (The pressure shown in the diagram is a reference based on the 0.2 MPa of primary air pressure for one piece of cylinder.)

Since the new PAL sensor works with less air-leakage compared to previous sensor valve,

- Enhances the pressure setting range of the sensor which enables the sensor to set easily.
  (Ex. Pressure setting range 0.03–0.195 MPa in the diagram)
- Allows the use for a number of cylinders by one air sensor because of better pressure holding when air is shut off. (Maximum number of cylinders to be detected by one sensor is 10.)
- Allows to choose less air-consumed, i.e. small orifice diameter type, air sensor.
- Can create large differential-pressure when opening and closing the PAL sensor so that sensor primary pressure can be set as low as possible and reduce the consumption of air.

New PAL sensor

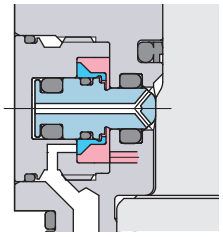

Poppet structure ensures superior sealing performance and can create large differential-pressure when the valve is opening and closing, and air leakage can be minimized.

Previous sensor valve

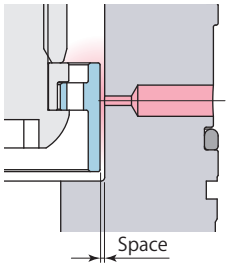

Air leaks easily due to a large space.

Dimensions

(Female thread rod)

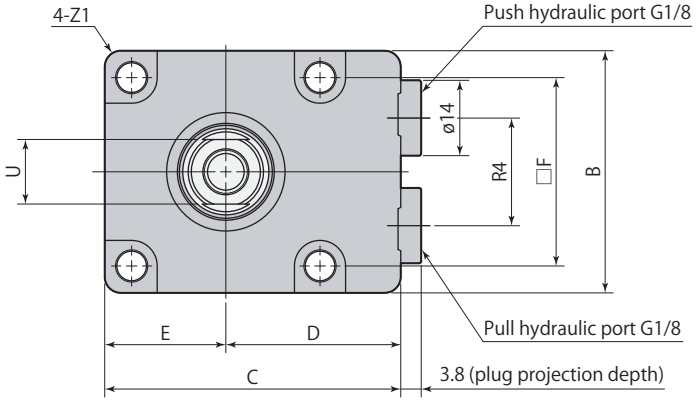

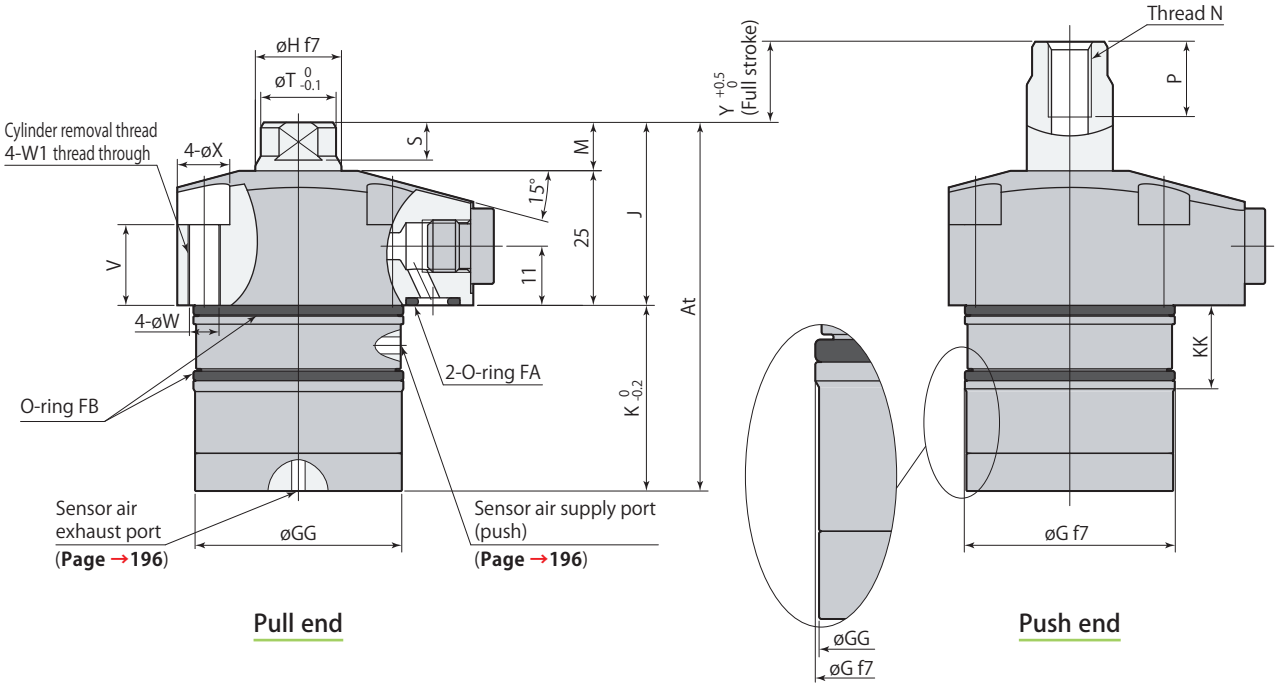

Pull end

Push end

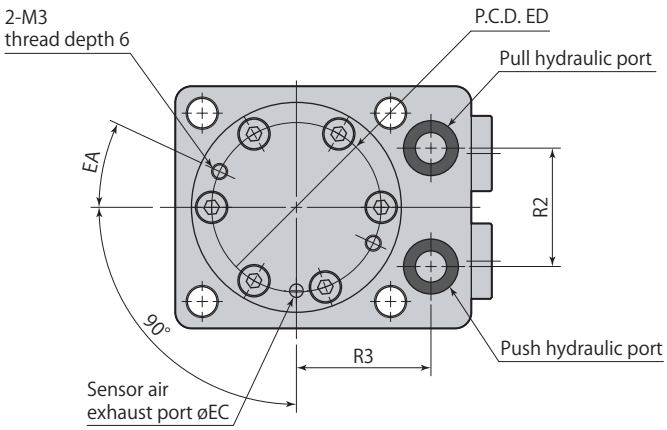

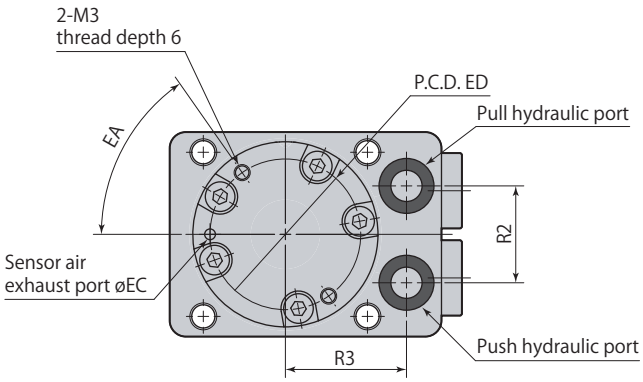

CNB01-□TU

● Mounting screws are not included.

mm

Model		CNB01-□TU		CNB02-□TU		CNB04-□TU	
Y (stroke)		10, 15, 20, 25, 30, 35, 40, 45, 50					
Cylinder capacity (cm³)	Push	0.38×Y		0.49×Y		0.71×Y	
	Pull	0.23×Y		0.29×Y		0.45×Y	
At		Y+51.5		Y+53.5		Y+57.5	
B		38		45		50	
C		50.5		55		60	
D		29		32.5		35	
E		21.5		22.5		25	
F		30.5		35		40	
øG		$35^{-0.025}_{-0.050}$		$39^{-0.025}_{-0.050}$		$47^{-0.025}_{-0.050}$	
øGG		34.4		38.4		46.4	
øH		$14^{-0.016}_{-0.034}$		$16^{-0.016}_{-0.034}$		$18^{-0.016}_{-0.034}$	
J		33		34		35	
K		Y+18.5		Y+19.5		Y+22.5	
KK		Y=10, 15	Y=20–50	Y=10, 15	Y=20–50	Y=10, 15	Y=20–50
		15.5	20.5	15.5	20.5	15.5	20.5
M		8		9		10	
N		M6×1		M8×1.25		M8×1.25	
P		11		14		14	
R2		18		22		24	
R3		22.5		25		28	
R4		16.2		20		22	
S (width across flats height)		6		7		8	
øT		12		14		16	
U (width across flats)		10		12		14	
V		17		15		15	
øW		4.5		5.5		5.5	
W1		M5×0.8		M6×1		M6×1	
øX		8		9.5		9.5	
Z1		R3		R3		R5	
EA		55°		25°		20°	
øEC		2		2.5		3.3	
ED		28		31.5		38	
O-ring FA (fluorocarbon hardness Hs90)		P7		P7		P7	
O-ring FB (fluorocarbon hardness Hs70)		AS568-026		AS568-028		AS568-030	
Flow control valve*	Meter-in	VCF01S		VCF01		VCF01	
	Meter-out	VCF01S-O		VCF01-O		VCF01-O	
Air bleeding valve		VCE01		VCE01		VCE01	

*: Select the right model of VCF according to the size of the cylinder.

Refer to each page for the details of options. ● Flow control valve **page →216** ● Air bleeding valve **page →218**

● CNB□-□TU (Push sensor model, Female thread rod) stroke 25, 35, 45 mm are made to order.

Mass

kg

Stroke	10	15	20	25	30	35	40	45	50
CNB01-□TU	0.5	0.5	0.6	0.6	0.6	0.6	0.7	0.7	0.7
CNB02-□TU	0.7	0.7	0.7	0.7	0.8	0.8	0.8	0.9	0.9
CNB04-□TU	0.9	0.9	1.0	1.0	1.1	1.1	1.2	1.2	1.3

Dimensions

(Pin rod)

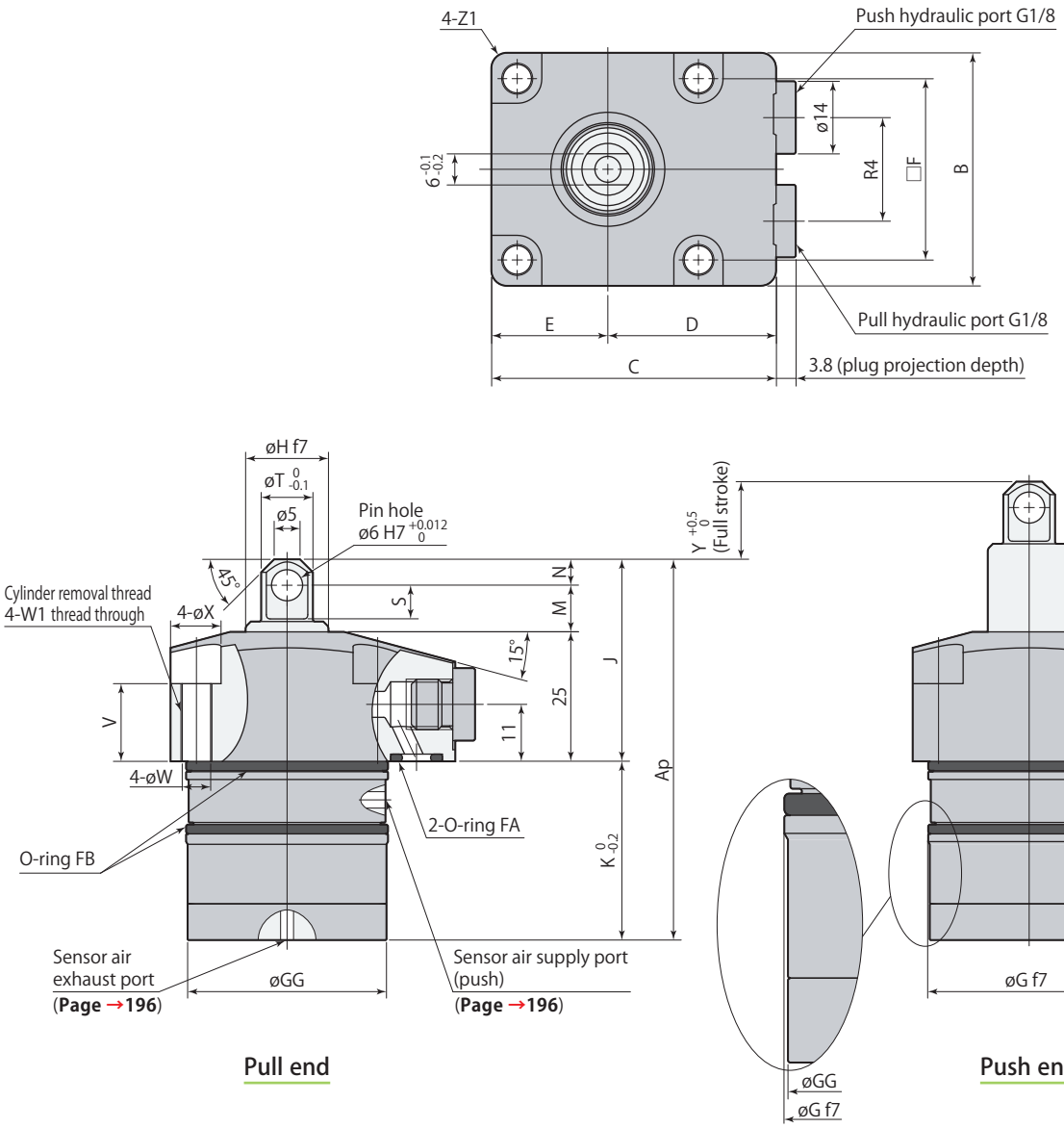

Pull end

Push end

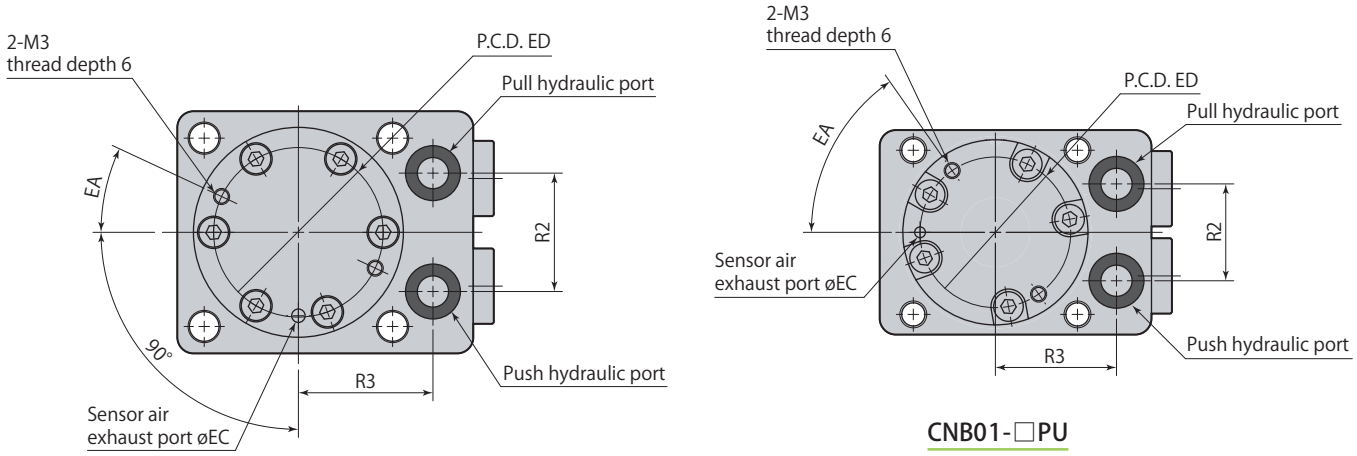

CNB01-□PU

- Mounting screws are not included.
- Recommended material for pin : SCM435-H (HB269–331)

mm

Model		CNB01-□PU		CNB02-□PU		CNB04-□PU	
Y (stroke)		10, 15, 20, 25, 30, 35, 40, 45, 50					
Cylinder capacity (cm³)	Push	0.38×Y		0.49×Y		0.71×Y	
	Pull	0.23×Y		0.29×Y		0.45×Y	
Ap		Y+57.5		Y+58.5		Y+63	
B		38		45		50	
C		50.5		55		60	
D		29		32.5		35	
E		21.5		22.5		25	
F		30.5		35		40	
øG		$35^{-0.025}_{-0.050}$		$39^{-0.025}_{-0.050}$		$47^{-0.025}_{-0.050}$	
øGG		34.4		38.4		46.4	
øH		$14^{-0.016}_{-0.034}$		$16^{-0.016}_{-0.034}$		$18^{-0.016}_{-0.034}$	
J		39		39		40.5	
K		Y+18.5		Y+19.5		Y+22.5	
KK		Y=10, 15	Y=20–50	Y=10, 15	Y=20–50	Y=10, 15	Y=20–50
		15.5	20.5	15.5	20.5	15.5	20.5
M		9		9		9.5	
N		5		5		6	
R2		18		22		24	
R3		22.5		25		28	
R4		16.2		20		22	
S		6.5		6.5		7	
øT		10		10		12	
V		17		15		15	
øW		4.5		5.5		5.5	
W1		M5×0.8		M6×1		M6×1	
øX		8		9.5		9.5	
Z1		R3		R3		R5	
EA		55°		25°		20°	
øEC		2		2.5		3.3	
ED		28		31.5		38	
O-ring FA (fluorocarbon hardness Hs90)		P7		P7		P7	
O-ring FB (fluorocarbon hardness Hs70)		AS568-026		AS568-028		AS568-030	
Flow control valve*	Meter-in	VCF01S		VCF01		VCF01	
	Meter-out	VCF01S-O		VCF01-O		VCF01-O	
Air bleeding valve		VCE01		VCE01		VCE01	

∗:Select the right model of VCF according to the size of the cylinder.

Refer to each page for the details of options. ●Flow control valve **page →216** ●Air bleeding valve **page →218**

●CNB□-□PU (Push sensor model, Pin rod) are made to order.

Mass

kg

Stroke	10	15	20	25	30	35	40	45	50
CNB01-□PU	0.5	0.5	0.6	0.6	0.6	0.6	0.7	0.7	0.7
CNB02-□PU	0.7	0.7	0.7	0.7	0.8	0.8	0.8	0.9	0.9
CNB04-□PU	0.9	0.9	1.0	1.0	1.1	1.1	1.2	1.2	1.3

Mounting details

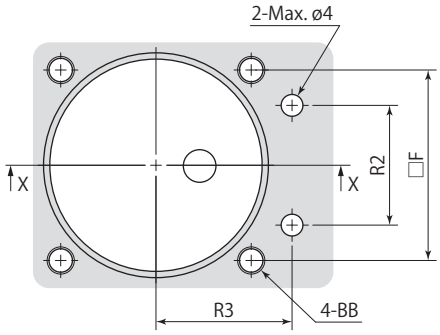

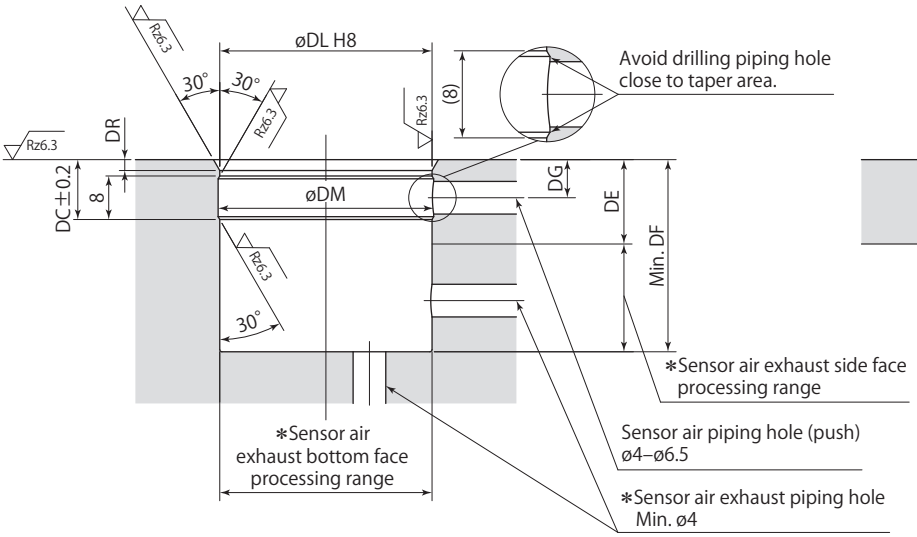

In blind hole X-X

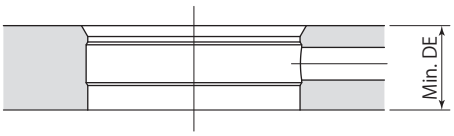

In through hole X-X

∗: Sensor air exhaust piping hole must be made on either side or bottom face.

Rz: ISO4287(1997)

- Apply an appropriate amount of grease to the chamfer and the bore when mounting. Excessive grease may be a blockage in the air passage, causing malfunction of the sensor.
- The 30° taper machining must be provided to avoid the damage of the O-ring. Ensure that there are no interference on taper area when drilling the hole for sensor air.
- The sensor air piping hole can be used for a pilot hole of Rc 1/16 plug.

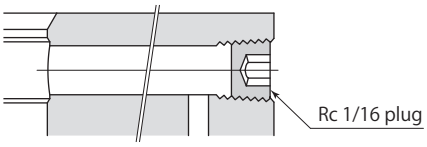

mm

Model	CNB01-□TU CNB01-□PU								
Stroke	10	15	20	25	30	35	40	45	50
DC	11	11	16	16	16	16	16	16	16
DE	15.5	15.5	20.5	20.5	20.5	20.5	20.5	20.5	20.5
DF	29	34	39	44	49	54	59	64	69
DG	7	7	12	12	12	12	12	12	12
øDL	$35^{+0.039}_{0}$								
øDM	35.6								
DR	2	2	1	1	1	1	1	1	1
BB	M4								
F	30.5								
R2	18								
R3	22.5								

mm

Model	CNB02-□TU CNB02-□PU								
Stroke	10	15	20	25	30	35	40	45	50
DC	11	11	16	16	16	16	16	16	16
DE	15.5	15.5	20.5	20.5	20.5	20.5	20.5	20.5	20.5
DF	30	35	40	45	50	55	60	65	70
DG	7	7	12	12	12	12	12	12	12
øDL	$39^{+0.039}_{0}$								
øDM	39.6								
DR	2	2	1	1	1	1	1	1	1
BB	M5								
F	35								
R2	22								
R3	25								

mm

Model	CNB04-□TU CNB04-□PU								
Stroke	10	15	20	25	30	35	40	45	50
DC	11	11	16	16	16	16	16	16	16
DE	15.5	15.5	20.5	20.5	20.5	20.5	20.5	20.5	20.5
DF	33	38	43	48	53	58	63	68	73
DG	7	7	12	12	12	12	12	12	12
øDL	$47^{+0.039}_{0}$								
øDM	47.6								
DR	2	2	1	1	1	1	1	1	1
BB	M5								
F	40								
R2	24								
R3	28								

Pull PAL sensor function and structure

In the middle of stroke

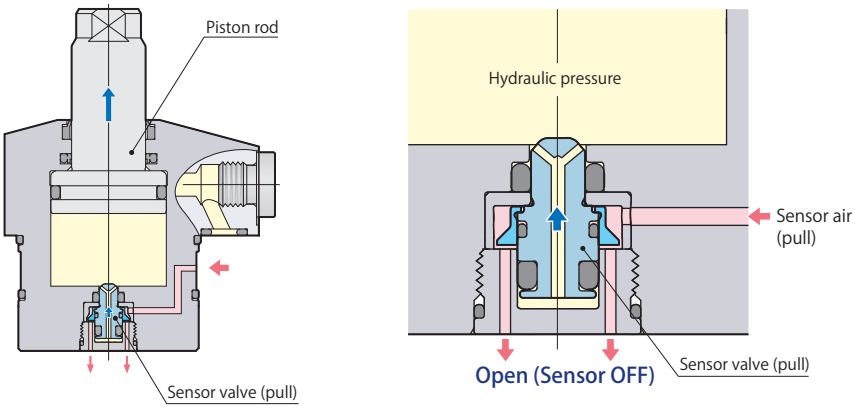

- The sensor valve (pull) is pushed up by the hydraulic force and exhausts the sensor air while piston rod strokes.

Pull end detection

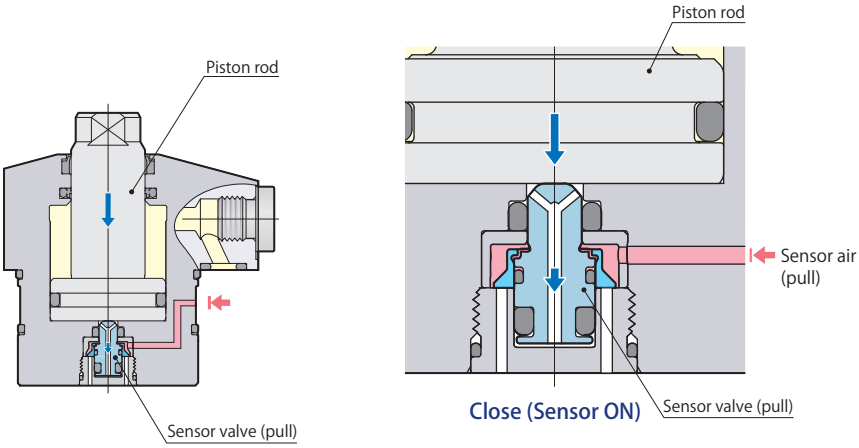

- The sensor valve (pull) is pushed down by the piston rod and shuts off the sensor air flow when the piston rod reaches the pull end position, and detects the pull end position.

Pull end detection signal

In the middle of stroke

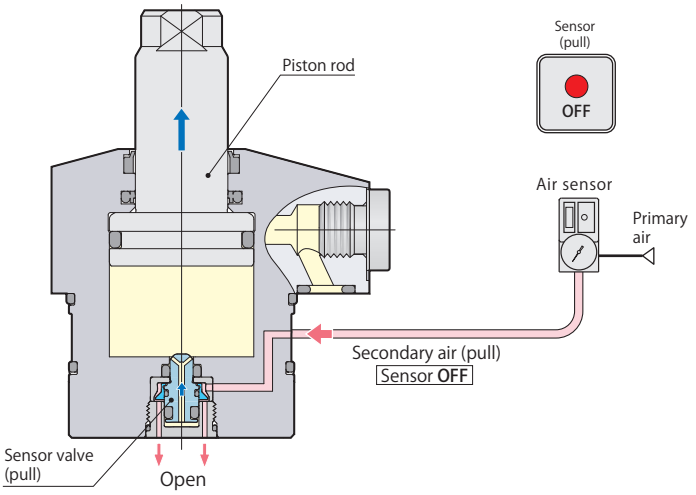

Sensor signal (pull)	OFF	Push end, in the middle of stroke

More than 1.5MPa hydraulic pressure is required to operate the sensor valve. To obtain OFF signal in the middle of the valve stroke, over 1.5MPa of back pressure should be produced by using a meter-out type of flow control valve.

Pull end detection

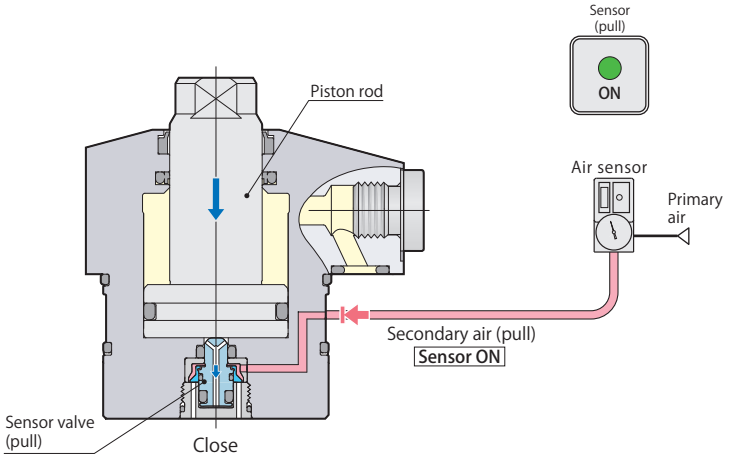

The sensor may not work correctly when the cylinder is not pressurized by hydraulic force because the piston of the clamp moves under such environment. Keep supplying hydraulic force the cylinder all the times.

Sensor signal (pull)	ON	Pull end

Air sensor triggering point

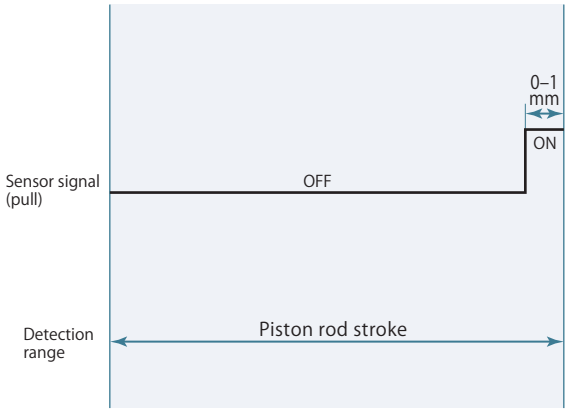

- Refer to the sensor supplier's instruction manual for the details of setting.
- Sensing performance such as detectable time and pressure differs depending on the supplier and model number of the sensor. Select the right model referring to sensor's application and characteristics.

Air sensor unit recommended condition of use

Supplier and model	ISA3-F/G series manufactured by SMC
	GPS2-05, GPS3-E series manufactured by CKD
Air supply pressure	0.1–0.2 MPa
Inner diameter of piping	ø4 mm (ISA3-F：ø2.5 mm)
Overall piping length	5 m or less

- Supply the dry and filtered air. Particulate size 5 μm or less is recommended.
- Use a solenoid valve with needle for air sensor unit and control it supplying air all the time in order to eliminate intrusion of chips or coolant.
- There is a case that air sensing cannot be successfully made as designed when it is used out of the above usage. Contact Technical service center for more details.

Relation between sensor air pressure, PAL sensor and piston stroke

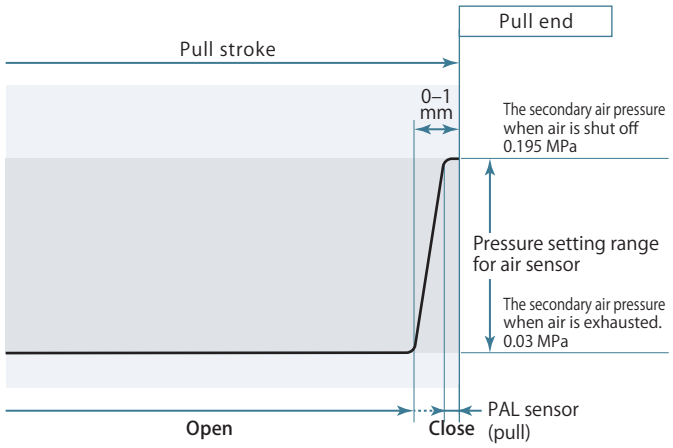

The diagram shown above indicates the relation between the PAL sensor, piston stroke, and secondary air pressure. (The pressure shown in the diagram is a reference based on the 0.2 MPa of primary air pressure for one piece of cylinder.)

Since the new PAL sensor works with less air-leakage compared to previous sensor valve,

- Enhances the pressure setting range of the sensor which enables the sensor to set easily.
  (Ex. Pressure setting range 0.03–0.195 MPa in the diagram)
- Allows the use for a number of cylinders by one air sensor because of better pressure holding when air is shut off. (Maximum number of cylinders to be detected by one sensor is 10.)
- Allows to choose less air-consumed, i.e. small orifice diameter type, air sensor.
- Can create large differential-pressure when opening and closing the PAL sensor so that sensor primary pressure can be set as low as possible and reduce the consumption of air.

New PAL sensor

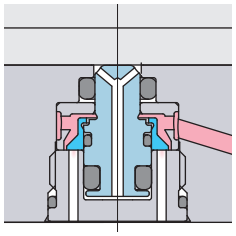

Poppet structure ensures superior sealing performance and can create large differential-pressure when the valve is opening and closing, and air leakage can be minimized.

Previous sensor valve

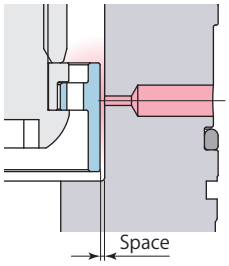

Air leaks easily due to a large space.

Dimensions

(Female thread rod)

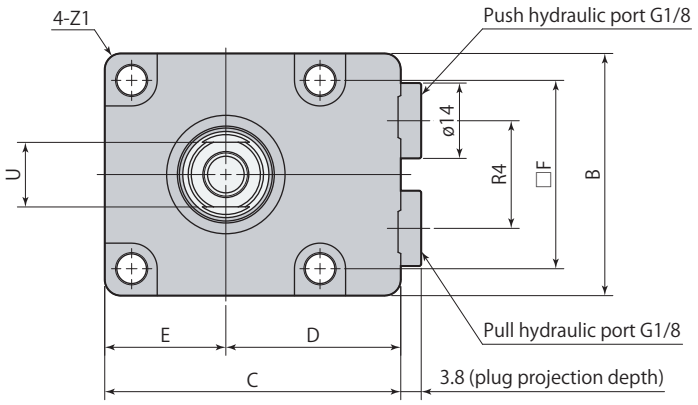

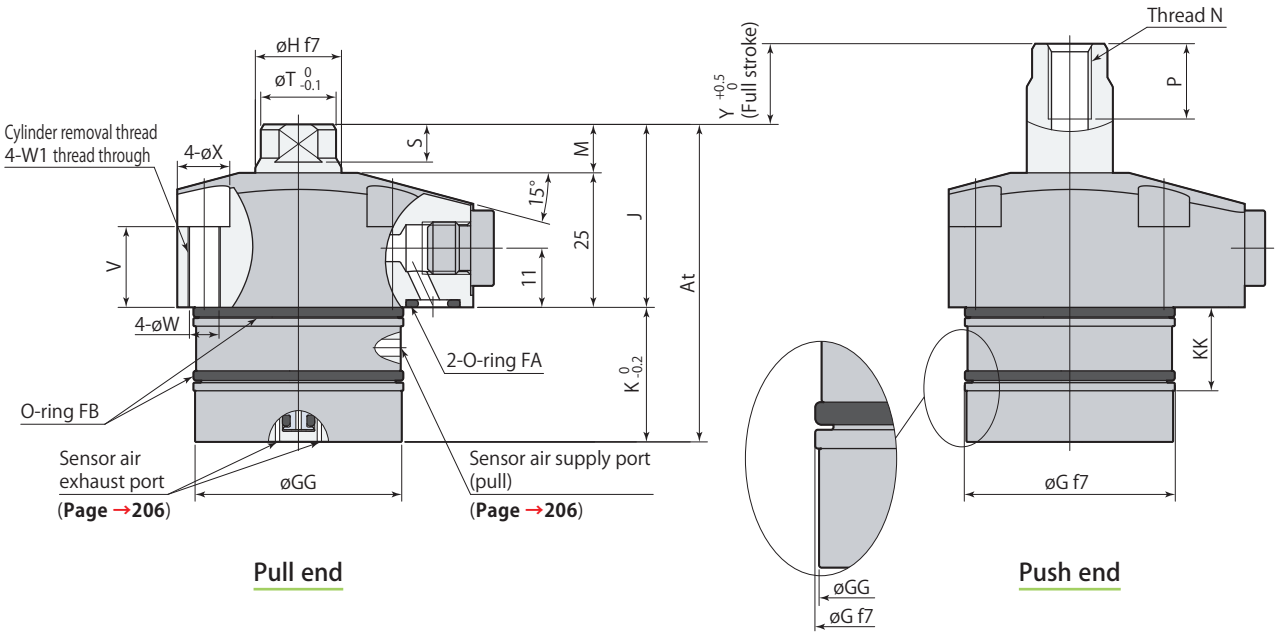

Pull end

Push end

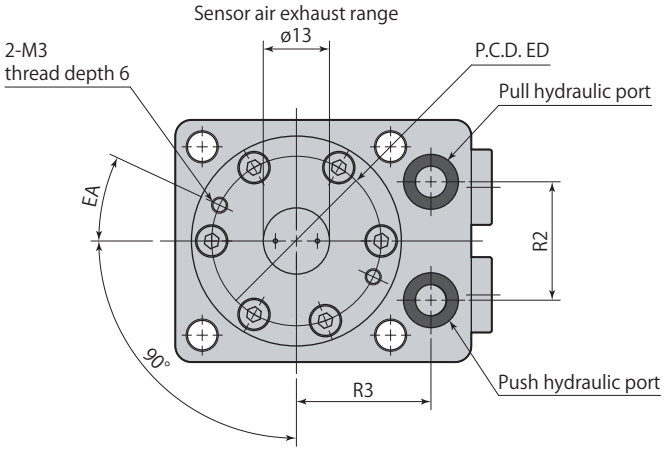

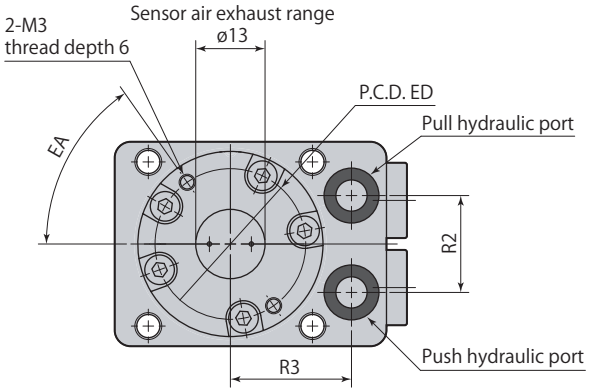

CNB01-□TB

● Mounting screws are not included.

mm

Model		CNB01-□TB		CNB02-□TB		CNB04-□TB	
Y (stroke)		10, 15, 20, 25, 30, 35, 40, 45, 50					
Cylinder capacity (cm³)	Push	0.38×Y		0.49×Y		0.71×Y	
	Pull	0.23×Y		0.29×Y		0.45×Y	
At		Y=10	Y=15–50	Y=10	Y=15–50	Y=10	Y=15–50
		58	Y+43	59	Y+44	61.5	Y+46.5
B		38		45		50	
C		48		55		60	
D		29		32.5		35	
E		19		22.5		25	
F		30.5		35		40	
øG		$35^{-0.025}_{-0.050}$		$39^{-0.025}_{-0.050}$		$47^{-0.025}_{-0.050}$	
øGG		34.4		38.4		46.4	
øH		$14^{-0.016}_{-0.034}$		$16^{-0.016}_{-0.034}$		$18^{-0.016}_{-0.034}$	
J		33		34		35	
K		Y=10	Y=15–50	Y=10	Y=15–50	Y=10	Y=15–50
		25	Y+10	25	Y+10	26.5	Y+11.5
KK		Y=10, 15	Y=20–50	Y=10, 15	Y=20–50	Y=10, 15	Y=20–50
		15.5	20.5	15.5	20.5	15.5	20.5
M		8		9		10	
N		M6×1		M8×1.25		M8×1.25	
P		11		14		14	
R2		18		22		24	
R3		22.5		25		28	
R4		16.2		20		22	
S (width across flats height)		6		7		8	
øT		12		14		16	
U (width across flats)		10		12		14	
V		17		15		15	
øW		4.5		5.5		5.5	
W1		M5×0.8		M6×1		M6×1	
øX		8		9.5		9.5	
Z1		R3		R3		R5	
EA		55°		25°		20°	
ED		28		31.5		38	
O-ring FA (fluorocarbon hardness Hs90)		P7		P7		P7	
O-ring FB (fluorocarbon hardness Hs70)		AS568-026		AS568-028		AS568-030	
Flow control valve*	Meter-in	VCF01S		VCF01		VCF01	
	Meter-out	VCF01S-O		VCF01-O		VCF01-O	
Air bleeding valve		VCE01		VCE01		VCE01	

*: Select the right model of VCF according to the size of the cylinder.

Refer to each page for the details of options. ● Flow control valve **page →216** ● Air bleeding valve **page →218**

● CNB□-□TB (Pull sensor model, Female thread rod) stroke 25, 35, 45 mm are made to order.

Mass

kg

Stroke	10	15	20	25	30	35	40	45	50
CNB01-□TB	0.5	0.5	0.5	0.5	0.5	0.6	0.6	0.6	0.6
CNB02-□TB	0.6	0.6	0.6	0.7	0.7	0.7	0.8	0.8	0.8
CNB04-□TB	0.8	0.8	0.8	0.9	0.9	1.0	1.0	1.1	1.1

Dimensions

(Pin rod)

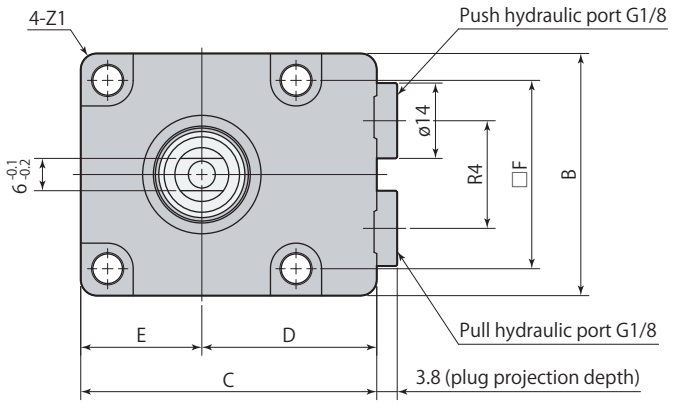

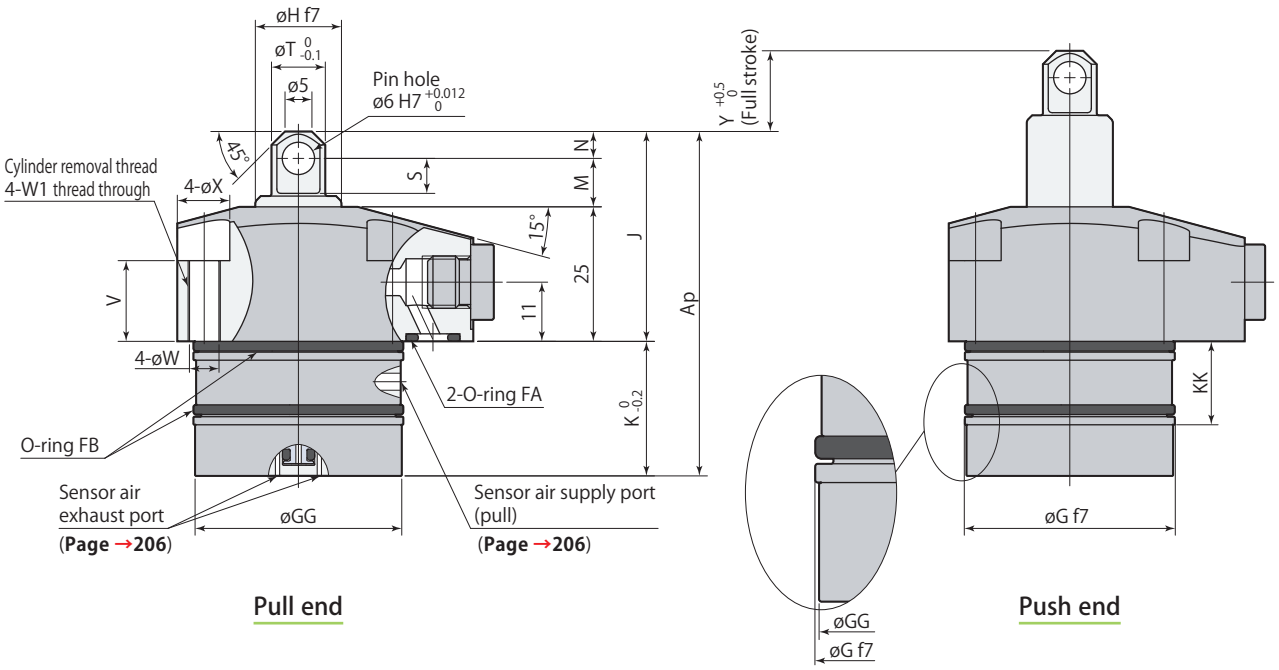

Pull end

Push end

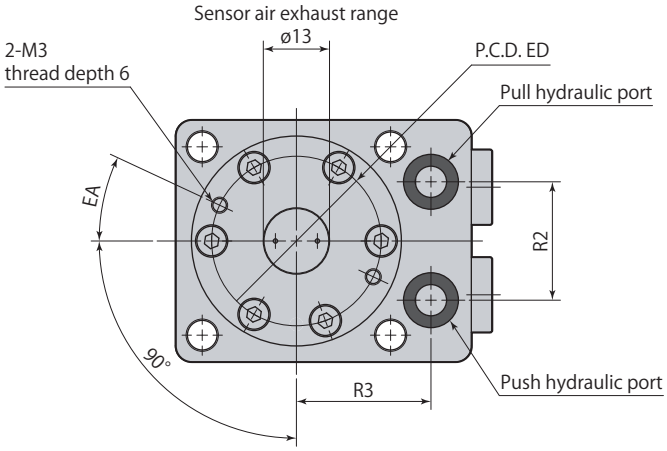

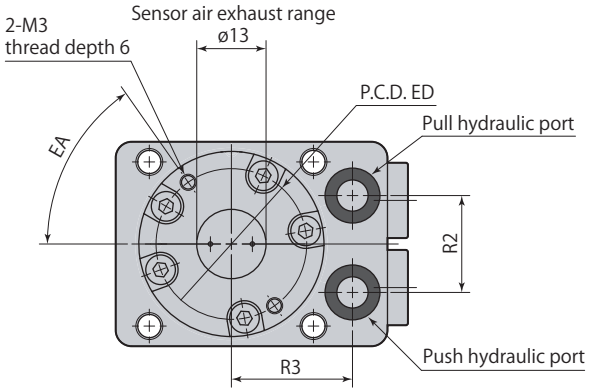

CNB01-□PB

- Mounting screws are not included.
- Recommended material for pin : SCM435-H (HB269–331)

mm

Model		CNB01-□PB		CNB02-□PB		CNB04-□PB	
Y (stroke)		10, 15, 20, 25, 30, 35, 40, 45, 50					
Cylinder capacity (cm³)	Push	0.38×Y		0.49×Y		0.71×Y	
	Pull	0.23×Y		0.29×Y		0.45×Y	
Ap		Y=10	Y=15–50	Y=10	Y=15–50	Y=10	Y=15–50
		64	Y+49	64	Y+49	67	Y+52
B		38		45		50	
C		48		55		60	
D		29		32.5		35	
E		19		22.5		25	
F		30.5		35		40	
øG		$35^{-0.025}_{-0.050}$		$39^{-0.025}_{-0.050}$		$47^{-0.025}_{-0.050}$	
øGG		34.4		38.4		46.4	
øH		$14^{-0.016}_{-0.034}$		$16^{-0.016}_{-0.034}$		$18^{-0.016}_{-0.034}$	
J		39		39		40.5	
K		Y=10	Y=15–50	Y=10	Y=15–50	Y=10	Y=15–50
		25	Y+10	25	Y+10	26.5	Y+11.5
KK		Y=10, 15	Y=20–50	Y=10, 15	Y=20–50	Y=10, 15	Y=20–50
		15.5	20.5	15.5	20.5	15.5	20.5
M		9		9		9.5	
N		5		5		6	
R2		18		22		24	
R3		22.5		25		28	
R4		16.2		20		22	
S		6.5		6.5		7	
øT		10		10		12	
V		17		15		15	
øW		4.5		5.5		5.5	
W1		M5×0.8		M6×1		M6×1	
øX		8		9.5		9.5	
Z1		R3		R3		R5	
EA		55°		25°		20°	
ED		28		31.5		38	
O-ring FA (fluorocarbon hardness Hs90)		P7		P7		P7	
O-ring FB (fluorocarbon hardness Hs70)		AS568-026		AS568-028		AS568-030	
Flow control valve*	Meter-in	VCF01S		VCF01		VCF01	
	Meter-out	VCF01S-O		VCF01-O		VCF01-O	
Air bleeding valve		VCE01		VCE01		VCE01	

*: Select the right model of VCF according to the size of the cylinder.

Refer to each page for the details of options. ● Flow control valve **page →216** ● Air bleeding valve **page →218**

● CNB□-□PB (Pull sensor model, Pin rod) are made to order.

Mass

kg

Stroke	10	15	20	25	30	35	40	45	50
CNB01-□PB	0.5	0.5	0.5	0.5	0.5	0.6	0.6	0.6	0.6
CNB02-□PB	0.6	0.6	0.6	0.7	0.7	0.7	0.8	0.8	0.8
CNB04-□PB	0.8	0.8	0.8	0.9	0.9	1.0	1.0	1.1	1.1

Mounting details

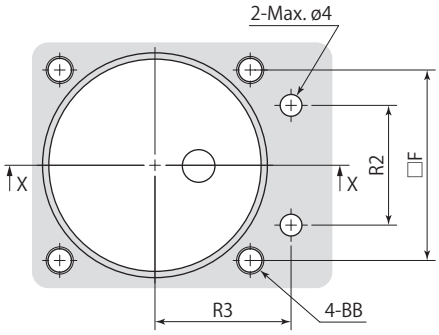

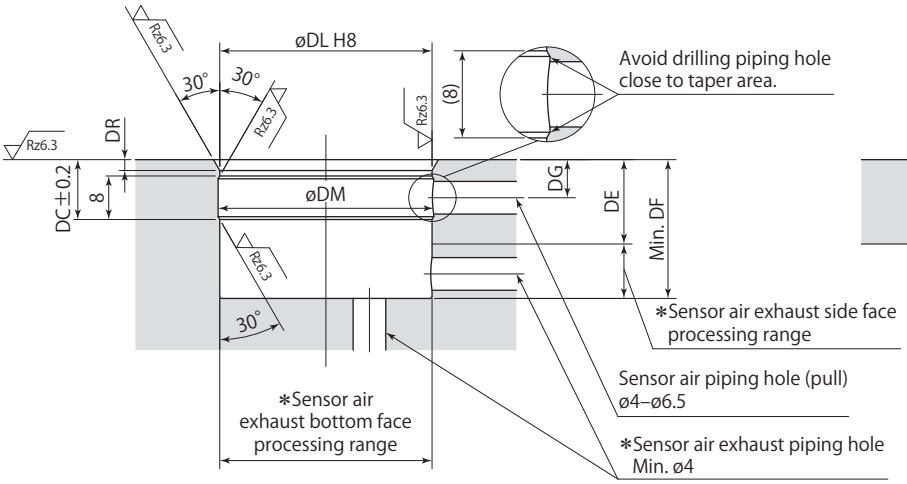

In blind hole X-X

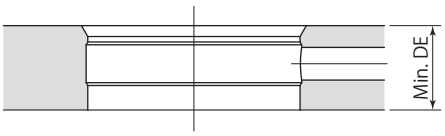

In through hole X-X

∗: Sensor air exhaust piping hole must be made on either side or bottom face.

Rz: ISO4287(1997)

- Apply an appropriate amount of grease to the chamfer and the bore when mounting. Excessive grease may be a blockage in the air passage, causing malfunction of the sensor.
- The 30° taper machining must be provided to avoid the damage of the O-ring. Ensure that there are no interference on taper area when drilling the hole for sensor air.
- The sensor air piping hole can be used for a pilot hole of Rc 1/16 plug.

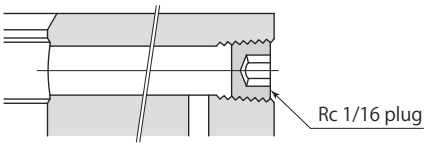

mm

Model	CNB01-□TB CNB01-□PB								
Stroke	10	15	20	25	30	35	40	45	50
DC	11	11	16	16	16	16	16	16	16
DE	15.5	15.5	20.5	20.5	20.5	20.5	20.5	20.5	20.5
DF	25.5	25.5	30.5	35.5	40.5	45.5	50.5	55.5	60.5
DG	7	7	12	12	12	12	12	12	12
øDL	$35^{+0.039}_{0}$								
øDM	35.6								
DR	2	2	1	1	1	1	1	1	1
BB	M4								
F	30.5								
R2	18								
R3	22.5								

mm

Model	CNB02-□TB CNB02-□PB								
Stroke	10	15	20	25	30	35	40	45	50
DC	11	11	16	16	16	16	16	16	16
DE	15.5	15.5	20.5	20.5	20.5	20.5	20.5	20.5	20.5
DF	25.5	25.5	30.5	35.5	40.5	45.5	50.5	55.5	60.5
DG	7	7	12	12	12	12	12	12	12
øDL	$39^{+0.039}_{0}$								
øDM	39.6								
DR	2	2	1	1	1	1	1	1	1
BB	M5								
F	35								
R2	22								
R3	25								

mm

Model	CNB04-□TB CNB04-□PB								
Stroke	10	15	20	25	30	35	40	45	50
DC	11	11	16	16	16	16	16	16	16
DE	15.5	15.5	20.5	20.5	20.5	20.5	20.5	20.5	20.5
DF	27	27	32	37	42	47	52	57	62
DG	7	7	12	12	12	12	12	12	12
øDL	$47^{+0.039}_{0}$								
øDM	47.6								
DR	2	2	1	1	1	1	1	1	1
BB	M5								
F	40								
R2	24								
R3	28								

Caution for piping

Refer to the diagram shown below for the sensor air exhaust port.

Mounting in blind hole
(Sensor air exhaust：side face)

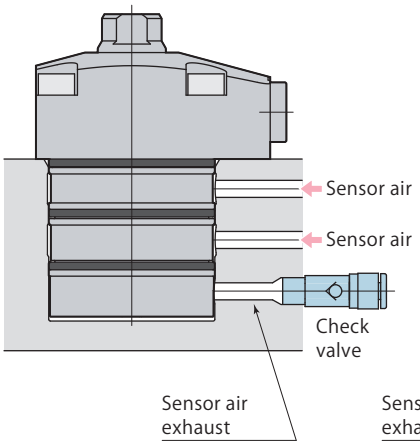

Mounting in blind hole
(Sensor air exhaust：bottom face)

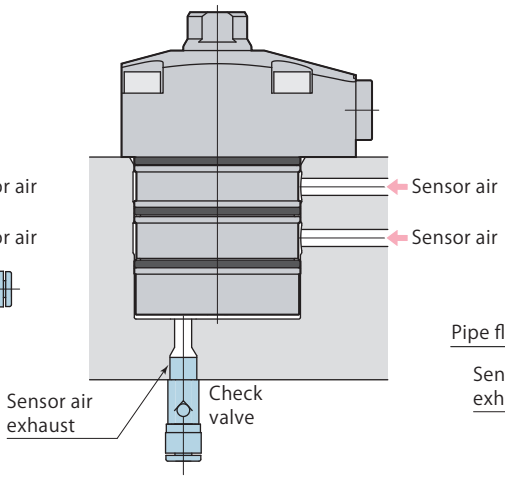

Mounting in through hole

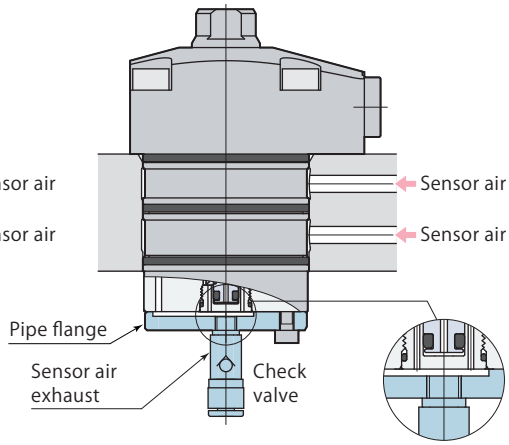

- Use a check valve with cracking pressure of 0.005 MPa or less if there is a risk of metal chips or coolant intrusion. Recommended check valve：AKH or AKB series manufactured by SMC.
- Furnish the piping by means of the pipe flange when mounting in a through hole. The flange is mountable with M3 threads at the bottom of the cylinder. Be sure to provide an opening not to cover the exhaust port. See the sketch shown above.

Dimensions

(Female thread rod)

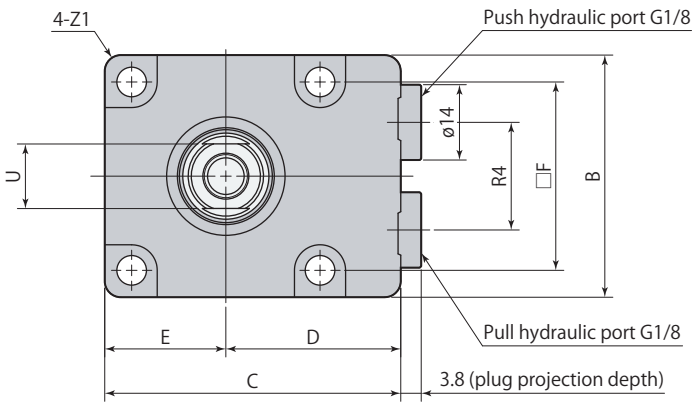

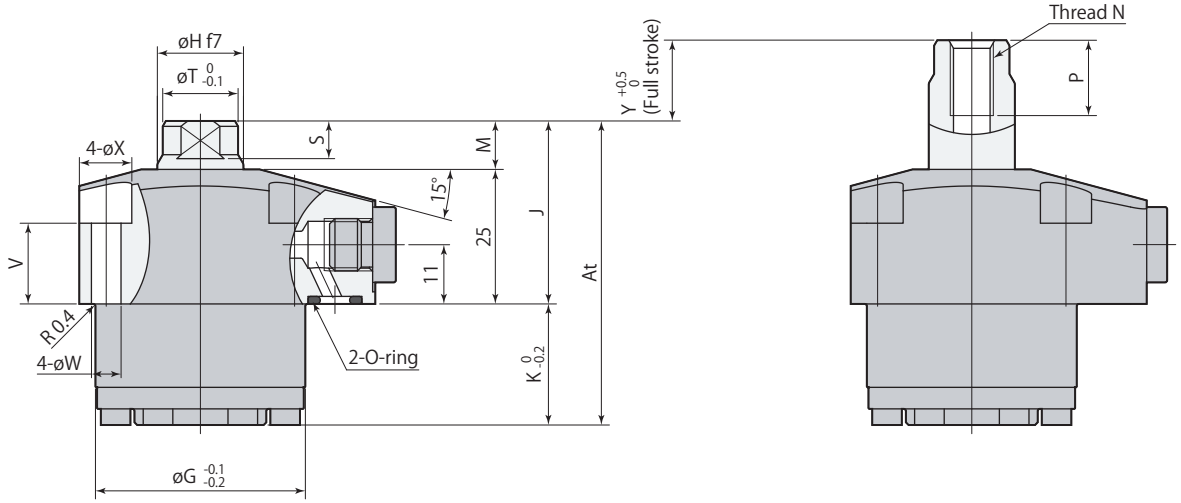

Pull end **Push end**

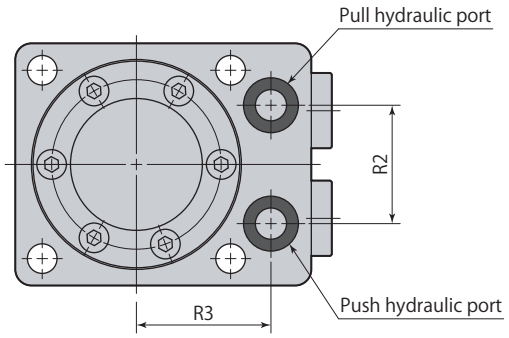

● Mounting screws are not included.

mm

Model		CNB01-□TN	CNB02-□TN	CNB04-□TN
Y (stroke)		10, 15, 20, 25, 30, 35, 40, 45, 50		
Cylinder capacity (cm³)	Push	0.38×Y	0.49×Y	0.71×Y
	Pull	0.23×Y	0.29×Y	0.45×Y
At		Y+39.5	Y+41.5	Y+45.5
B		38	45	50
C		48	55	60
D		29	32.5	35
E		19	22.5	25
F		30.5	35	40
øG		35	39	47
øH		$14^{-0.016}_{-0.034}$	$16^{-0.016}_{-0.034}$	$18^{-0.016}_{-0.034}$
J		33	34	35
K		Y+6.5	Y+7.5	Y+10.5
M		8	9	10
N		M6×1	M8×1.25	M8×1.25
P		11	14	14
R2		18	22	24
R3		22.5	25	28
R4		16.2	20	22
S (width across flats height)		6	7	8
øT		12	14	16
U (width across flats)		10	12	14
V		17	15	15
øW		4.5	5.5	5.5
øX		8	9.5	9.5
Z1		R3	R3	R5
O-ring (fluorocarbon hardness Hs90)		P7	P7	P7
Flow control valve*	Meter-in	VCF01S	VCF01	VCF01
	Meter-out	VCF01S-O	VCF01-O	VCF01-O
Air bleeding valve		VCE01	VCE01	VCE01

*: Select the right model of VCF according to the size of the cylinder.

Refer to each page for the details of options. ● Flow control valve **page →216** ● Air bleeding valve **page →218**

● CNB□-□TN (Compact model, Female thread rod) stroke 25, 35, 45 mm are made to order.

Mass

kg

Stroke	10	15	20	25	30	35	40	45	50
CNB01-□TN	0.4	0.4	0.5	0.5	0.5	0.5	0.6	0.6	0.6
CNB02-□TN	0.6	0.6	0.6	0.6	0.7	0.7	0.7	0.8	0.8
CNB04-□TN	0.8	0.8	0.8	0.9	0.9	1.0	1.0	1.1	1.1

Dimensions

(Pin rod)

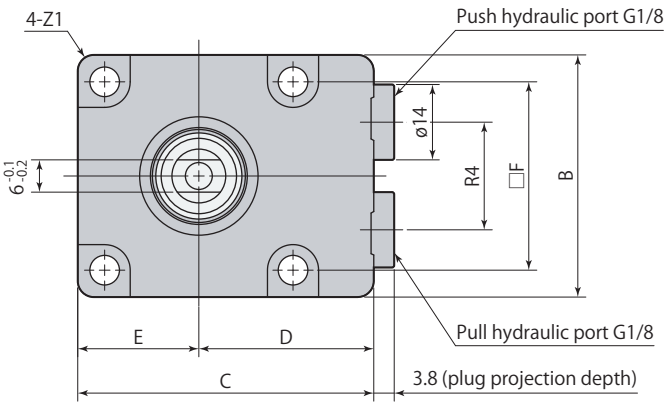

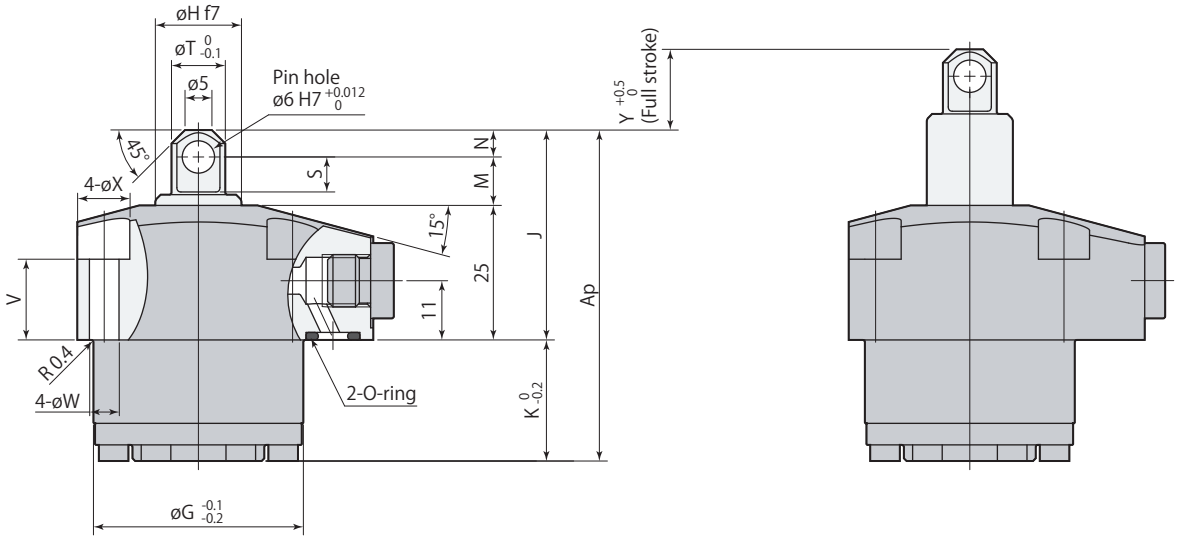

Pull end **Push end**

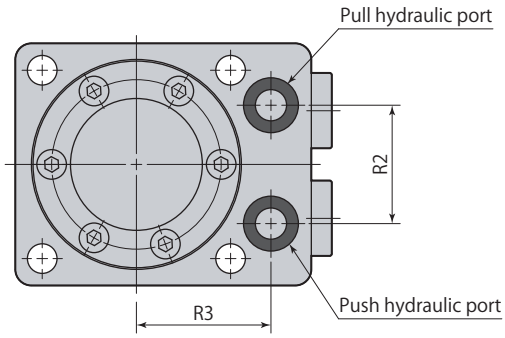

- Mounting screws are not included.
- Recommended material for pin：SCM435-H (HB269–331)

mm

Model		CNB01-□PN	CNB02-□PN	CNB04-□PN
Y (stroke)		10, 15, 20, 25, 30, 35, 40, 45, 50		
Cylinder capacity (cm³)	Push	0.38×Y	0.49×Y	0.71×Y
	Pull	0.23×Y	0.29×Y	0.45×Y
Ap		Y+45.5	Y+46.5	Y+51
B		38	45	50
C		48	55	60
D		29	32.5	35
E		19	22.5	25
F		30.5	35	40
øG		35	39	47
øH		$14^{-0.016}_{-0.034}$	$16^{-0.016}_{-0.034}$	$18^{-0.016}_{-0.034}$
J		39	39	40.5
K		Y+6.5	Y+7.5	Y+10.5
M		9	9	9.5
N		5	5	6
R2		18	22	24
R3		22.5	25	28
R4		16.2	20	22
S		6.5	6.5	7
øT		10	10	12
V		17	15	15
øW		4.5	5.5	5.5
øX		8	9.5	9.5
Z1		R3	R3	R5
O-ring (fluorocarbon hardness Hs90)		P7	P7	P7
Flow control valve*	Meter-in	VCF01S	VCF01	VCF01
	Meter-out	VCF01S-O	VCF01-O	VCF01-O
Air bleeding valve		VCE01	VCE01	VCE01

*: Select the right model of VCF according to the size of the cylinder.

Refer to each page for the details of options. ● Flow control valve **page →216** ● Air bleeding valve **page →218**

● CNB□-□PN (Compact model, Pin rod) are made to order.

Mass

kg

Stroke	10	15	20	25	30	35	40	45	50
CNB01-□PN	0.4	0.4	0.5	0.5	0.5	0.5	0.6	0.6	0.6
CNB02-□PN	0.6	0.6	0.6	0.6	0.7	0.7	0.7	0.8	0.8
CNB04-□PN	0.8	0.8	0.8	0.9	0.9	1.0	1.0	1.1	1.1

Mounting details

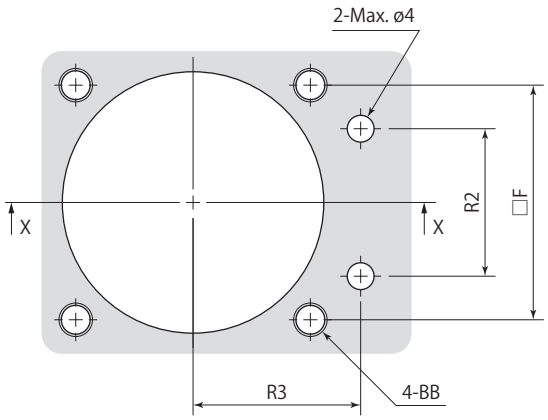

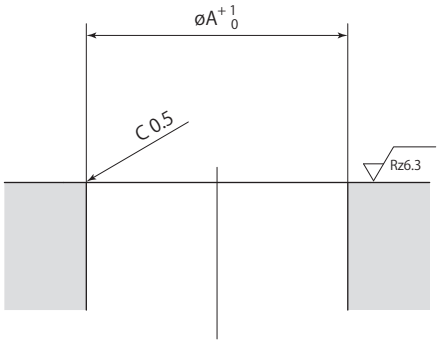

X-X

Rz: ISO4287(1997)

mm

Model	CNB01-□TN CNB01-□PN	CNB02-□TN CNB02-□PN	CNB04-□TN CNB04-□PN
øA	35	39	47
F	30.5	35	40
R2	18	22	24
R3	22.5	25	28
BB	M4	M5	M5

Comparison dimensional

model **CNB□-□□D**
Push, pull sensor model D

model **CNB□-□□U**
Push sensor model U

model **CNB□-□□B**
Pull sensor model B

model **CNB□-□□N**
Compact model N

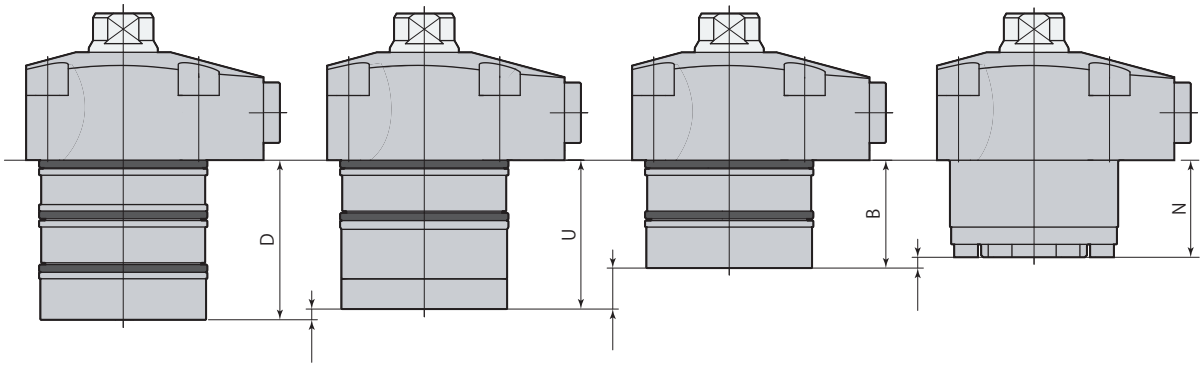

mm

Model	CNB01-□		CNB02-□		CNB04-□	
Y (stroke)	10, 15, 20, 25, 30, 35, 40, 45, 50					
D	Y=10	Y=15–50	Y=10	Y=15–50	Y=10	Y=15–50
	37	Y+22	37	Y+22	38.5	Y+23.5
U	Y+18.5		Y+19.5		Y+22.5	
B	Y=10	Y=15–50	Y=10	Y=15–50	Y=10	Y=15–50
	25	Y+10	25	Y+10	26.5	Y+11.5
N	Y+6.5		Y+7.5		Y+10.5	

Specifications

(Nil) : Meter-in

Body color : Silver

O : Meter-out

Body color : Black

VCF

G port size

- 01S : G1/8
- 01 : G1/8
- 02 : G1/4
- 03 : G3/8

–

Control method

- (Nil) : Meter-in

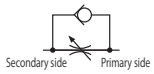

- O : Meter-out

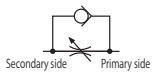

Model		Meter-in				Meter-out			
		VCF01S	VCF01	VCF02	VCF03	VCF01S-O	VCF01-O	VCF02-O	VCF03-O
G port size		G1/8	G1/8	G1/4	G3/8	G1/8	G1/8	G1/4	G3/8
Cracking pressure	MPa	0.04	0.04	0.04	0.04	0.1	0.1	0.1	0.1
Orifice area	mm^2	4.9	4.9	9.6	19.6	3.1	3.1	6.2	12.6
Recommended tightening torque	N·m	10	10	30	35	10	10	30	35
Mass	kg	0.011	0.013	0.024	0.038	0.011	0.013	0.024	0.038

- Pressure range : 0.5–7 MPa
- Proof pressure : 10.5 MPa
- Operating temperature : 0–70 ℃
- Fluid used : General mineral based hydraulic oil (ISO-VG32 equivalent)

Dimensions

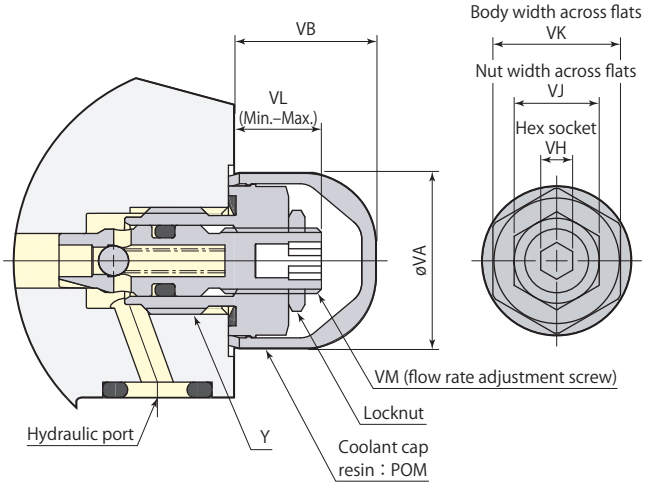

mm

Model	VCF01S VCF01S-O	VCF01 VCF01-O	VCF02 VCF02-O	VCF03 VCF03-O
Y	G1/8	G1/8	G1/4	G3/8
øVA	16	16	21	24
VB	13	13	13	14
VH	3	3	5	6
VJ	8	8	10	14
VK	12	12	17	19
VL	8–11	7–11	7.5–11.5	8.5–12.5
Adjustment screw number of turns	4 rotations	5.3 rotations	5.3 rotations	5.3 rotations
VM	M6×0.75	M6×0.75	M8×0.75	M10×0.75

- Use a closed wrench or socket wrench for mounting and dismounting.
- Flow control valve can be mounted on hydraulic port (G port) when manifold piping.
- Adjust flow rate without hydraulic pressure. Conducting adjustments with hydraulic pressure may result in damaging seal.
- Diagram above indicates mounting for meter-in (VCF□).
- VCF is shipped with the valve fully open. Adjust the flow rate by loosening the screws after it is screwed in to close totally. Tighten the locknut after adjustment is completed.

Applicable clamp and work support

Model	VCF01S	VCF01	VCF02	VCF03
Swing clamp (double acting)	CTM03, 04, 05, 06 CTP04, 05, 06	CTM10 CTU01, 02, 04, 06	CTM16 CTU10, 16	CTU25
Swing clamp (single acting)*	CTN02, 04, 05, 06	CTT01, 02, 04, 06	CTN10, 16 CTT10, 16	CTT25
Swivel clamp (double acting)*	CTS04	CTS06	CTS10, 16	–
Link clamp (double acting)	CLM03, 04 CLP04, 05, 06	CLM05, 06, 10 CLU02, 04, 06	CLM16 CLU10, 16	CLU25
Link clamp (single acting)*	CLN04	CLN05, 06 CLT02, 04, 06	CLN10, 16 CLT10, 16	CLT25
Work lift cylinder	CNB01	CNB02, 04	–	–
Push, pull cylinder	–	CNA02, 04, 06	CNA10, 16	CNA25
Work support*	CSU CSP-D(CSN, CSY)	–	–	–

*: Single acting swing clamp, swivel clamp, single acting link clamp and work support are meter-in only.

Mounting details

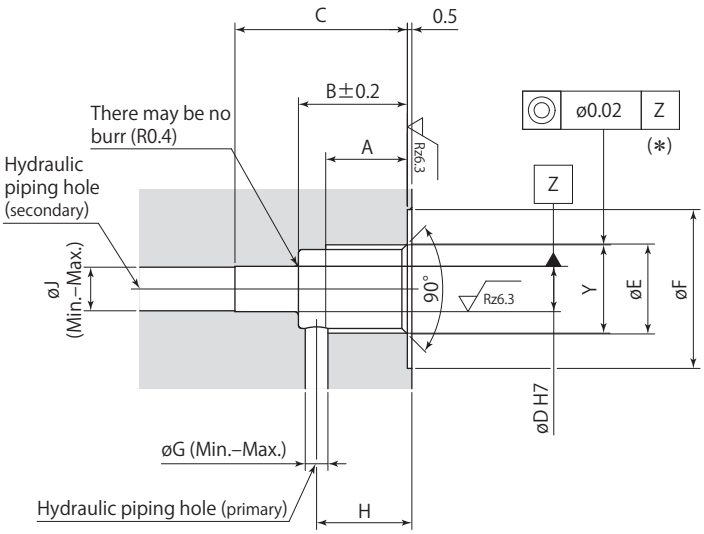

Rz: ISO4287(1997)

mm

Model	VCF01S VCF01S-O	VCF01 VCF01-O	VCF02 VCF02-O	VCF03 VCF03-O
A	9	9	13	13
B	11	13	18	19
C	15.5	17.5	22.5	23.5
øD	$5^{+0.012}_{0}$	$5^{+0.012}_{0}$	$6^{+0.012}_{0}$	$8^{+0.015}_{0}$
øE	9.9	9.9	13.3	16.8
øF	17.5	17.5	21.5	24.5
øG	1.5–2	2.5–3	3.5–5	5–6
H	9–10	9.5–11.5	14.5–15.5	15–16
øJ	2.5–5	2.5–5	3.5–6	5–8
Y	G1/8	G1/8	G1/4	G3/8

*: Concentricity is required when machining øD and Y-portion thread. Misalignment or machining defect may cause the trouble of installation and adjusting flow rate.

Mounting & dismounting of flow control valve, air bleeding valve

- When mounting or dismounting a flow control valve or air bleeding valve, be sure to set pressure within hydraulic circuit to 0 MPa before starting.
- When mounting a flow control valve or air bleeding valve, be sure to tighten it with the recommended tightening torque.
- When mounting a coolant cap (resin: POM), firmly press the body of cover. If it is not mounting properly, use a plastic mallet to tap it into place.
- When dismounting a coolant cap, use a sharp-pointed tool such as a precision screw driver by hooking the notched portion.

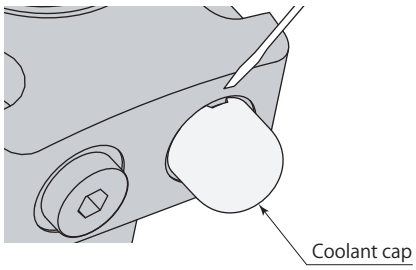

Mounting example

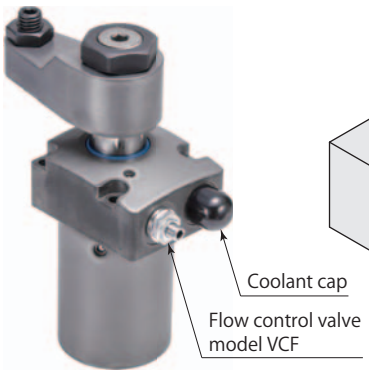

Cylinder mounting

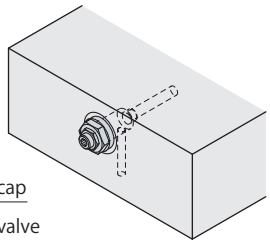

Pallet mounting

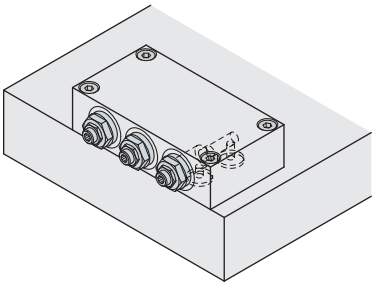

Block mounting ①

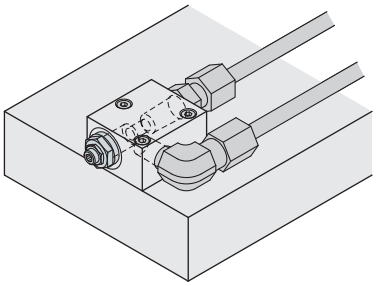

Block mounting ②

Specifications

G port size

VCE

01	: G1/8
02	: G1/4
03	: G3/8

Model	VCE01	VCE02	VCE03
G port size	G1/8	G1/4	G3/8
Recommended tightening torque N·m	10	30	35
Mass kg	0.017	0.029	0.044
Pressure range MPa	0–50		
Operating temperature °C	0–70		
Fluid used	General mineral based hydraulic oil (ISO-VG32 equivalent)		

Dimensions

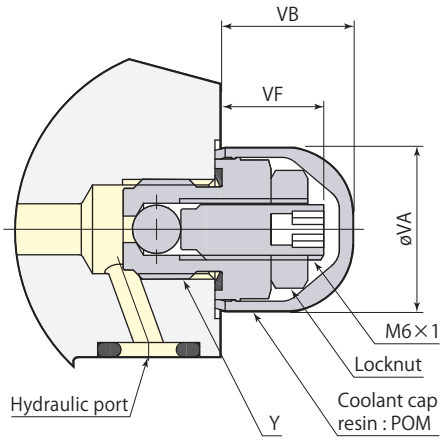

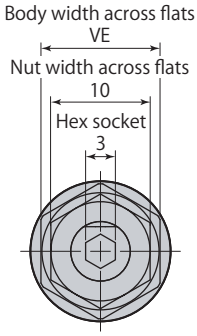

mm

Model	VCE01	VCE02	VCE03
A	9	13	13
B	10	14	14
øE	9.9	13.3	16.8
øF	17.5	21.5	24.5
Y	G1/8	G1/4	G3/8
øVA	16	21	24
VB	13	13	14
VE	12	17	19
VF	10.5	10.5	11.5

- Use a closed wrench or socket wrench for mounting and dismounting.
- Air bleeding valve can be mounted on hydraulic port (G port) when manifold piping.

Mounting details

Rz: ISO4287(1997)

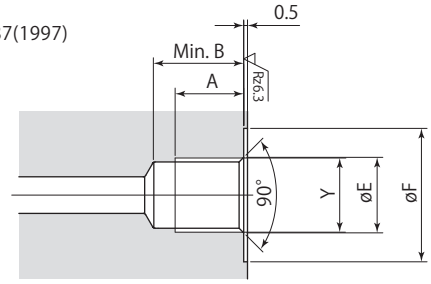

Applicable clamp and work support

Model	VCE01	VCE02	VCE03
Swing clamp (double acting)	CTM03, 04, 05, 06, 10 CTP04, 05, 06 CTU01, 02, 04, 06	CTM16 CTU10, 16	CTU25
Swing clamp (single acting)	CTN02, 04, 05, 06 CTT01, 02, 04, 06	CTN10, 16 CTT10, 16	CTT25
Swivel clamp (double acting)	CTS04, 06	CTS10, 16	–
Link clamp (double acting)	CLM03, 04, 05, 06, 10 CLP04, 05, 06 CLU02, 04, 06	CLM16 CLU10, 16	CLU25
Link clamp (single acting)	CLN04, 05, 06 CLT02, 04, 06	CLN10, 16 CLT10, 16	CLT25
Work lift cylinder	CNB01, 02, 04	–	–
Push, pull cylinder	CNA02, 04, 06	CNA10, 16	CNA25
Work support	CSU CST CSP-D(CSN, CSY, CSK)	–	–

Parallel thread connector

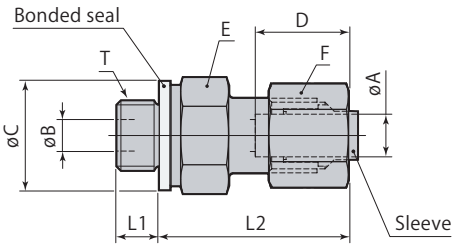

mm

Model	Applicable pipe outer diameter øA	T	øB	øC	D	Width across flats E	Width across flats F	L1	L2
8FKCO06010	6	G1/8	4	17	17.5	14	14	6	32.5
8FKCO08010	8		4	17	17.5	17	17	6	32.5
8FKCO08020	8	G1/4	6	20.5	17.5	19	17	10	33.5
8FKCO10020	10		6	20.5	18.5	19	19	10	34.5
8FKCO10030	10	G3/8	8	24	18.5	22	19	10	35.5
8FKCO12030	12		8	24	18.5	22	22	10	35.5

Parallel thread adaptor

Use NE bite type tube fitting from Ihara Science Corporation on opposite side.

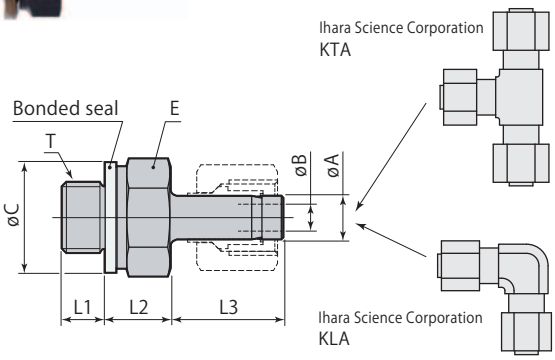

mm

Model	Applicable pipe outer diameter øA	T	øB	øC	Width across flats E	L1	L2	L3
8FKHB06010	6	G1/8	3	17	14	6	9	21
8FKHB08020	8	G1/4	5	20.5	19	10	10	21
8FKHB10020	10		6	20.5	19	10	10	22
8FKHB10030	10	G3/8	6	24	22	10	11	22
8FKHB12030	12		8	24	22	10	11.5	22.5

Stud elbow

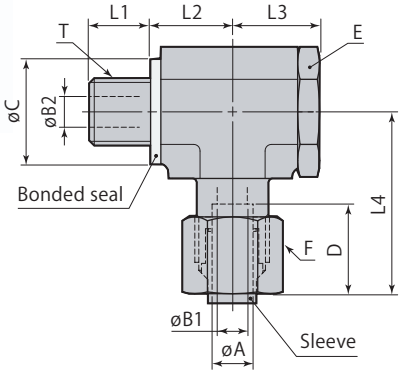

mm

Model	Applicable pipe outer diameter øA	T	øB1	øB2	øC	D	Width across flats E	Width across flats F	L1	L2	L3	L4
8FKMB06010	6	G1/8	4	4	17	17.5	17	14	8	13	14	33.5
8FKMB08020	8	G1/4	6	7	20.5	17.5	22	17	12	16	17	35.5
8FKMB10020	10		8	7	20.5	18.5	22	19	12	16	17	36.5
8FKMB12030	12	G3/8	10	9	24	18.5	27	22	12	19	22	40.5

Bonded seal (spare parts)

Standard material is NBR for rubber and SPCC (cold roll steel) for metal ring.
A bonded seal is usually supplied with a fitting however Pascal sells it alone as a service part.

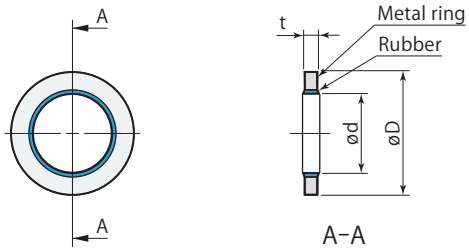

mm

Model	Applicable thread	ød	øD	t
8FKP-C-010	G1/8	9.9	17	2
8FKP-C-020	G1/4	13.3	20.5	2
8FKP-C-030	G3/8	16.8	24	2

- Use a bonded seal to seal flange surface where a fitting will be fitted (do not use O-ring type G thread fitting).
- Use the sleeve KKO from Ihara Science Corporation for the sleeve of fitting.

Caution in use of equipment

1. Clamp and work supports have been developed for the purpose of clamping workpiece for machine tools.
   Do not use them for other purposes.

2. Always protect them with a cover to ensure sliding surfaces are not exposed to weld slags when using them as jig for welding.

3. Clean sliding surfaces and top part of clamp body with air blowing periodically to ensure smooth operations.

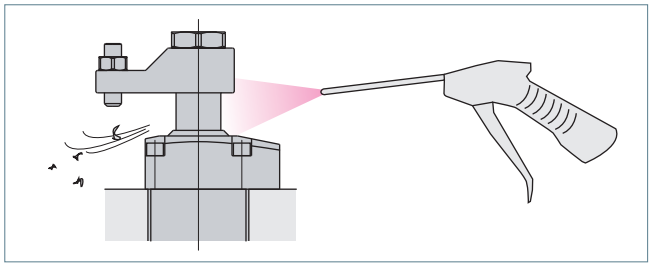

Caution for hydraulic piping

1. Most problems that occur with hydraulic equipment are caused by foreign substances such as metal chips and dust that enter into hydraulic circuits. Refer to "Piping Hydraulic & Pneumatic Equipment-Practical Notes" provided with the product for mounting and hydraulic piping of the product.

2. After performing hydraulic piping, always be sure to bleed out air in the hydraulic circuit. Insufficient bleeding can lead to malfunction.

3. When using multiple clamps, operating speeds and timings vary due to variance in pipe resistance and internal resistance of clamps. Adjust operating speeds and timings using flow control valve.

G port sealing method

1. "Sealing method for flange surfaces" has been adopted as standard means for this product. Use fittings and connectors of bonded seal or elastic body seal. Do not use fittings of "Sealing method for tapered surfaces" (O-ring seal method).

2. Seal tapes and liquid packing are not necessary. Seal fittings are included with packing.

3. When mounting, clean metal chips and dust off surfaces that will come into contact with packing.

Sealing method for flange surfaces

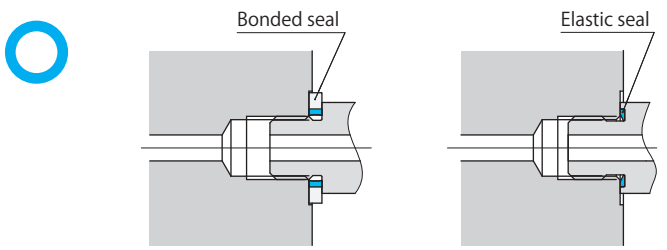

Use bonded seal or elastic seal for flat surfaces.

Sealing method for tapered surfaces

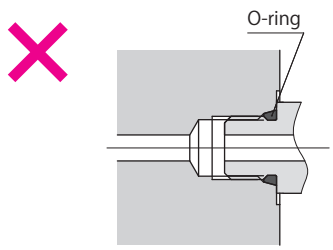

Seal tapered surface with an O-ring.
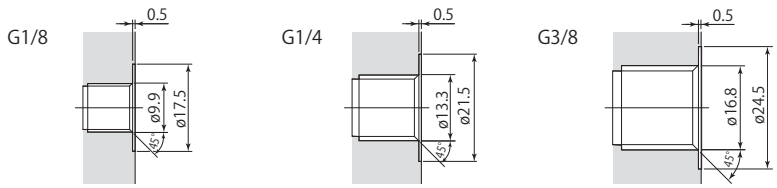
G port details